CCD-TR913E/TR950E

RMT-708

SERVICE MANUAL

Self Diagnosis Supported model

Ver 1.0 1999.02

Photo: CCD-TR950E

AEP Model
North European Model
East European Model
Russian Model
CCD-TR913E/TR950E

UK Model
CCD-TR913E

Handycam
video Hi8 XR
InfoLITHIUM

B501 MECHANISM

For MECHANISM ADJUSTMENT, refer to the "8mm Video MECHANICAL ADJUSTMENT MANUAL Ⅶ" (9-973-801-11).

SPECIFICATIONS

Video camera recorder

System

Video recording system
2 rotary heads
Helical scanning FM system
Audio recording system
Rotary heads, FM system
Video signal
PAL colour, CCIR standards
Usable cassette
8mm video format cassette
Hi8 or standard 8
Recording/playback time (using cassette E6/P6-90)
SP mode: 1 hour and 30 minutes
LP mode: 3 hours
Fastforward/rewind time (using cassette E6/P6-90)
Approx. 8 min.
Image device
1/4 inch CCD (Charge Coupled Device)
Approx. 570,000 pixels (Effective: Approx. 360,000 pixels)
Lens
Combined power zoom lens
Filter diameter 37 mm (1 7/16 in.)
TR913E: AEP2, UK/
TR950E: AEP model:
20× (Optical), 80× (Digital)
TR913E: AEP1, EE, NE, RU/
TR950E: EE, NE, RU model:
20× (Optical), 360× (Digital)
Focal distance
3.6 - 72 mm (5/32 - 2 7/8 in.)
When converted to a 35 mm still camera
41 - 820 mm (1 5/8 - 32 3/8 in.)
Colour temperature
Auto
Minimum illumination
0.7 lux (F 1.4)
0 lux (in the NightShot mode)*
* Objects unable to be seen due to the dark can be shot with infrared lighting.

Input and output connectors

S video output
4-pin mini DIN
Luminance signal: 1 Vp-p, 75 ohms, unbalanced
Chrominance signal: 0.3 Vp-p, 75 ohms, unbalanced
Video output
Phono jack, 1 Vp-p, 75 ohms, unbalanced
Audio output
Phono jacks (2: stereo L and R)
327 mV, (at output impedance 47 kilohms) impedance less than 2.2 kilohms
RFU DC OUT
Special minijack, DC 5V
Headphone jack
Stereo minijack (ø 3.5 mm)
LANC control jack
Stereo mini-minijack (ø 2.5 mm)
MIC jack
Minijack, 0.388 mV low impedance with 2.5 to 3.0 V DC, output impedance 6.8 kilohms (ø 3.5 mm)
Stereo type

General

Power requirements
7.2 V (battery pack)
8.4 V (AC power adaptor)
Average power consumption (when using the battery pack)
During camera recording
CCD-TR913E : 2.3 W
CCD-TR950E : 2.2 W
Operating temperature
0 °C to 40 °C (32 °F to 104 °F)
Storage temperature
–20 °C to +60 °C (–4 °F to +140 °F)
Dimensions (Approx.)
CCD-TR913E: 102 × 106 × 212 mm (4 1/8 × 4 1/4 × 8 3/8 in.) (w/h/d)
CCD-TR950E: 102 × 106 × 195 mm (4 1/8 × 4 1/4 × 7 3/4 in.) (w/h/d)
Mass (approx.)
810 g (1 lb 12 oz)
excluding the battery pack, lithium battery, cassette and shoulder strap
950 g (2 lb 1 oz)
including the battery pack NP-F330, lithium battery CR2025, cassette E6/P6-90 and shoulder strap
Supplied accessories
See page 2.

AC power adaptor

Power requirements
100 - 240 V AC, 50/60 Hz
Power consumption
23 W
Output voltage
DC OUT: 8.4 V, 1.5 A in operating mode
Operating temperature
0 °C to 40 °C (32 °F to 104 °F)
Storage temperature
–20 °C to +60 °C (–4 °F to +140 °F)
Dimensions (approx.)
125 × 39 × 62 mm
(5 × 1 9/16 × 2 1/2 in.) (w/h/d)
excluding projecting parts
Mass (approx.)
280 g (9.8 oz)
excluding mains lead
Cord length (approx.)
Mains lead: 2 m (6.6 feet)
Connecting cord: 1.6 m (5.2 feet)

Design and specifications are subject to change without notice.

- Abbrevation
  EE : East European model
  NE : North European model
  RU : Russian model

Hi8 VIDEO CAMERA RECORDER

MICROFILM

SONY

Table for difference of function

Model		CCD-TR913E	CCD-TR950E	Remark
Destination		AEP1, AEP2, UK, NE, EE, RU	AEP, NE, EE, RU	
Lens	Optical	20×	20×	
	Digital	80× (Note)	80× (Note)	
Color EVF		×	○	○ : With VF-126 board
B/W EVF		○	×	○ : With VF-129 board

Note : AEP1, EE, NE, RU model is 360×.

- Abbreviation
  NE : North European Model
  EE : East European Model
  RU : Russian Model

Supplied accessories

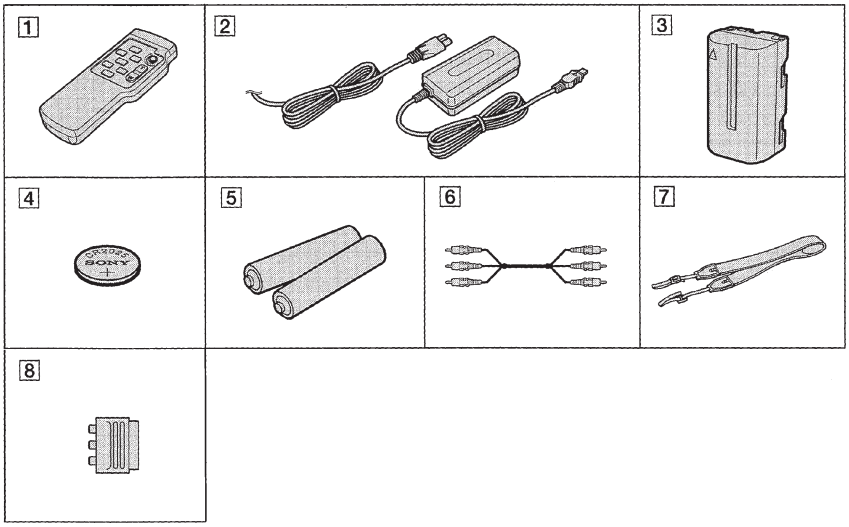

1 **Wireless Remote Commander** (1)

2 **AC-L10A/L10B/L10C AC power adaptor** (1), **Mains lead** (1)

3 **NP-F330 battery pack** (1)

4 **CR2025 lithium battery** (1)
The lithium battery is already installed in your camcorder.

5 **R6 (size AA) battery for Remote Commander** (2)

6 **A/V connecting cable** (1)

7 **Shoulder strap** (1)

8 **21 pin adaptor** (1)

SAFETY-RELATED COMPONENT WARNING!!

COMPONENTS IDENTIFIED BY MARK ⚠ OR DOTTED LINE WITH MARK ⚠ ON THE SCHEMATIC DIAGRAMS AND IN THE PARTS LIST ARE CRITICAL TO SAFE OPERATION. REPLACE THESE COMPONENTS WITH SONY PARTS WHOSE PART NUMBERS APPEAR AS SHOWN IN THIS MANUAL OR IN SUPPLEMENTS PUBLISHED BY SONY.

SAFETY CHECK-OUT

After correcting the original service problem, perform the following safety checks before releasing the set to the customer.

1. Check the area of your repair for unsoldered or poorly-soldered connections. Check the entire board surface for solder splashes and bridges.
2. Check the interboard wiring to ensure that no wires are "pinched" or contact high-wattage resistors.
3. Look for unauthorized replacement parts, particularly transistors, that were installed during a previous repair. Point them out to the customer and recommend their replacement.
4. Look for parts which, through functioning, show obvious signs of deterioration. Point them out to the customer and recommend their replacement.
5. Check the B+ voltage to see it is at the values specified.
6. Flexible Circuit Board Repairing
   - Keep the temperature of the soldering iron around 270˚C during repairing.
   - Do not touch the soldering iron on the same conductor of the circuit board (within 3 times).
   - Be careful not to apply force on the conductor when soldering or unsoldering.

TABLE OF CONTENTS

SERVICE NOTE

1. POWER SUPPLY DURING REPAIRS 6
2. TO TAKE OUT A CASSETTE WHEN NOT EJECT (FORCE EJECT) 6

SELF-DIAGNOSIS FUNCTION

1. Self-diagnosis Function 7
2. Self-diagnosis Display 7
3. Service Mode Display 7
- 3-1. Display Method 7
- 3-2. Switching of Backup No. 7
- 3-3. End of Display 8
4. Self-diagnosis Code Table 8

1. GENERAL

Checking supplied accessories 1-1
Quick Start Guide 1-1
- 1. Connecting the mains lead 1-1
- 2. Inserting a cassette 1-1
- 3. Recording a picture 1-1
- 4. Monitoring the playback picture in the viewfinder 1-1

Getting Started 1-1
- Using this manual 1-1
- Step 1 Preparing the power supply 1-2
- Step 2 Inserting a cassette 1-3

Recording – Basics 1-4
- Recording a picture 1-4
- Checking the recording – EDITSEARCH/Rec Review 1-6

Playback – Basics 1-6
- Connections for playback 1-6
- Playing back a tape 1-7

Advanced Recording Operations 1-8
- Photo recording 1-8
- Using the wide mode 1-8
- Using the fader function 1-9
- Using special effects – Picture effect 1-9
- Using special effects – Digital effect 1-10
- Using the PROGRAM AE function 1-11
- Adjusting the exposure manually 1-11
- Focusing manually 1-12
- Superimposing a title 1-12
- Making your own titles 1-13
- Using the built-in light 1-13

Advanced Playback Operations 1-14
- Playing back a tape with digital effects 1-14

Editing on Other Equipment 1-14
- Dubbing a tape 1-14

Customizing Your Camcorder 1-15
- Changing the MENU settings 1-15
- Resetting the date and time 1-16

Additional Information 1-17
- Usable cassettes and playback modes 1-17
- Changing the lithium battery in your camcorder 1-17
- Troubleshooting 1-18
- Self-diagnosis display 1-19
- Warning indicators and messages 1-19
- Using your camcorder abroad 1-19
- Maintenance information and precautions 1-19

Quick Reference 1-21
- Identifying the parts and controls 1-21
- Quick function guide 1-23

2. DISASSEMBLY

- 2-1. Cabinet (R) Assembly (TR913E), (TR950E) 2-2
- 2-2. Mechanism Deck 2-3
- 2-3. Color EVF Block, VF-126 Board (TR950E) 2-4
- 2-4. B/W EVF Block, VF-129 Board (TR913E) 2-5
- 2-5. Lens Block 2-6
- 2-6. Mechanism Deck, VC-214, DD-117 Boards 2-7
- 2-7. Video Light 2-8
- 2-8. CF-58 Board (TR913E) 2-9
  CF-58 Board (TR950E) 2-9
- 2-9. How to Identify Drum and Note 2-10
- 2-10. Circuit Boards Location 2-11
- 2-11. Flexible Boards Location 2-11

3. BLOCK DIAGRAMS

- Overall Block Diagram 3-1
- Camera/Video Block Diagram 3-5
- VTR/Camera Control Block Diagram 3-9
- 3-4. Servo Block Diagram 3-13
- 3-5. Mode Control Block Diagram 3-15
- 3-6. Audio Block Diagram 3-17
- 3-7. Color EVF Block Diagram (CCD-TR950E) 3-23
- 3-8. B/W EVF Block Diagram (CCD-TR913E) 3-27
- 3-9. Power Block Diagram 3-31

4. PRINTED WIRING BOARDS AND SCHEMATIC DIAGRAMS

- Frame Schematic Diagram-1 4-1
- Frame Schematic Diagram-2 4-3
- Printed Wiring Boards and Schematic Diagrams 4-7
- CD-209 (CCD Imager) Printed Wiring Board and Schematic Diagram 4-8
- VC-214 (Camera Processor, Y/C Processor, Focus/Zoom Motor Drive, REC/PB Head AMP, Video/Interface, IR, Mode Control, Servo, System Control,Audio Processor) Printed Wiring Board 4-11
- VC-214 (Camera Processor)(1/10) Schematic Diagram 4-17
- VC-214 (Y/C Processor)(2/10) Schematic Diagram 4-19
- VC-214 (Focus/Zoom Motor Drive)(3/10) Schematic Diagram 4-25
- VC-214 (REC/PB Head AMP)(4/10) Schematic Diagram 4-27
- VC-214 (Video/Interface)(5/10) Schematic Diagram 4-30
- VC-214 (IR Transmitter)(6/10) Schematic Diagram 4-33
- VC-214 (Mode Control)(7/10) Schematic Diagram 4-36
- VC-214 (Servo)(8/10) Schematic Diagram 4-39
- FP-249 (S/T Reel Sensor), FP-356 (Top Sensor), FP-355 (Tape LED) Flexible Board 4-42
- VL-25 (Video Light) Printed Wiring Board 4-43
- VC-214 (HI Control)(9/10) Schematic Diagram 4-44
- VC-214 (Audio)(10/10) Schematic Diagram 4-47
- SE-85 (Steady Shot), PJ-94 (AV IN/OUT) Printed Wiring Boards 4-50
- SE-85 (Steady Shot), PJ-94 (AV IN/OUT) Schematic Diagrams 4-53
- MA-353 (Stereo MIC AMP, Laser Link) Printed Wiring Board 4-55
- MA-353 (Stereo MIC AMP, Laser Link) Schematic Diagram 4-57
- VF-126 (Color EVF) Printed Wiring Board 4-61

• VF-126 (Color EVF)
Schematic Diagram ····· 4-63
• FK-8500, SS-8500 (Control Switch Block)
Schematic Diagram ····· 4-68
• VF-129 (B/W EVF)
Printed Wiring Board and
Schematic Diagram 4-69
• CF-58 (User Control)
Printed Wiring Board 4-72
• CF-58 (User Control)
Schematic Diagram ····· 4-73
• DD-117 (DC/DC Converter)
Printed Wiring Board ····· 4-79
• DD-117 (DC/DC Converter)
Schematic Diagram ····· 4-81

5. ADJUSTMENTS

5-1. CAMERA SECTION ADJUSTMENT ····· 5-1
1-1. Preparations before Adjustment (Camera Section) ····· 5-1
1-1-1. List of Service Tools ····· 5-1
1-1-2. Adjusting Items When Replacing Main Parts ····· 5-2
1-1-3. Preparations ····· 5-3
1-1-4. Precaution ····· 5-3
1. Setting the Switch ····· 5-5
2. Order of Adjustments ····· 5-5
3. Subjects ····· 5-5
1-2. Initialization of D, E, F Page Data ····· 5-6
1. Initializing the D, E, F Page Data ····· 5-6
2. Modification of D, E, F Page Data ····· 5-6
3. D Page Table ····· 5-6
4. F Page Table ····· 5-7
5. E Page Table ····· 5-10
1-3. Camera System Adjustments ····· 5-13
1. HALL Adjustment ····· 5-13
2. Flange Back Adjustment ····· 5-13
2-1. Flange Back Adjustment (1) ····· 5-13
2-2. Flange Back Adjustment (2) ····· 5-14
3. Flange Back Check ····· 5-14
4. Picture Frame Setting ····· 5-15
5. AGC Gain Calibration Adjustment ····· 5-15
6. Color Reproduction Adjustment ····· 5-16
7. IRIS IN/OUT Adjustment ····· 5-16
8. MAX GAIN Adjustment ····· 5-17
9. Auto White Balance Standard Data Input ····· 5-17
10. Auto White Balance Adjustment ····· 5-18
11. White Balance Check ····· 5-19
12. Angular Velocity Sensor Sensitivity Preset and Steady Shot Check ····· 5-20
1-4. Color Electronic Viewfinder System Adjustment (CCD-TR950E) ····· 5-21
1. EVF Initial Data Input ····· 5-21
2. VCO Adjustment (VF-126 board) ····· 5-22
3. Bright Adjustment (VF-126 board) ····· 5-22
4. Contrast Adjustment (VF-126 board) ····· 5-23
5. Backlight Consumption Current Adjustment (VF-126 board) ····· 5-23
6. White Balance Adjustment (VF-126 board) ····· 5-24
1-5. Monochrome Electronic Viewfinder System Adjustment (CCD-TR913E) ····· 5-25
1-5-1. Horizontal Slant Check ····· 5-25
1-5-2. Centering Adjustment ····· 5-25
1-5-3. Focus Adjustment ····· 5-25
1-5-4. Aberration Adjustment ····· 5-26
1-5-5. Horizontal Amplitude Adjustment (VF-129 board) ····· 5-26
1-5-6. Vertical Amplitude Adjustment (VF-129 board) ····· 5-27
1-5-7. Brightness Adjustment (VF-129 Board) ····· 5-27
1-5-8. Horizontal Amplitude, Vertical Amplitude, Focus Check ····· 5-27
5-2. MECHANISM SECTION ADJUSTMENT ····· 5-28
2-1. Operating Without Cassette ····· 5-28
2-2. Tape Path Adjustment ····· 5-28
5-3. VIDEO SECTION ADJUSTMENT ····· 5-29
3-1. Preparations Before Adjustments ····· 5-29
3-1-1. Equipment to Required ····· 5-29
3-1-2. Precautions on Adjusting ····· 5-30
3-1-3. Adjusting Connectors ····· 5-30
3-1-4. Connecting the Equipments ····· 5-31
3-1-5. Alignment Tape ····· 5-32
3-1-6. Output Level and Impedance ····· 5-32
3-1-7. Recording Mode (Standard 8/Hi8) Switching ····· 5-32
3-2. System Control System Adjustment ····· 5-33
1. Initialization of D, E, F Page Data ····· 5-33
2. Battery End Adjustment (VC-214 board) ····· 5-33
3-3. Servo System Adjustments ····· 5-34
1. CAP FG Offset Adjustment (VC-214 board) ····· 5-34
2. Switching Position Adjustment (VC-214 board) ····· 5-34
3-4. Video System Adjustments ····· 5-35
1. 28 MHz Origin Oscillation Adjustment (VC-214 board) ····· 5-35
2. AFC f_0 Adjustment (VC-214 board) ····· 5-35
3. Filter f_0 Adjustment (VC-214 board) ····· 5-36
4. Y OUT Level Adjustment (VC-214 board) ····· 5-36
5. C OUT Level Adjustment (VC-214 board) ····· 5-37
6. RP Filter f_0 Adjustment (VC-214 board) ····· 5-37
7. REC Y Current Adjustment (VC-214 board) ····· 5-38
8. REC L Level Adjustment (VC-214 board) ····· 5-39
9. REC C Current Adjustment (VC-214 board) ····· 5-40
3-5. IR Transmitter Adjustments ····· 5-41
IR Video Carrier Frequency Adjustment (VC-214 board) ····· 5-41
IR Video Deviation Adjustment (VC-214 board) ····· 5-41
IR Audio Deviation Adjustment (VC-214 board) ····· 5-42
3-6. Audio System Adjustment ····· 5-43
1.5 MHz Deviation Adjustment (VC-214 board) ····· 5-44
1.7 MHz Deviation Adjustment (VC-214 board) ····· 5-45
BPF f_0 Adjustment (VC-214 board) ····· 5-46
5-4. SERVICE MODE ····· 5-47
4-1. Adjustment Remote Commander ····· 5-47
Using the Adjustment Remote Commander ····· 5-47
2. Precautions Upon Using the Adjustment Remote Commander ····· 5-47
4-2. Data Process ····· 5-48
4-3. Service Mode ····· 5-49
Test Mode Setting ····· 5-49
2. Emergency Memory Address ····· 5-50
EMG Code (Emergency Code) ····· 5-50
MSW Codes ····· 5-51
3. Bit Value Discrimination ····· 5-52
4. Input/Output Selection Check ····· 5-52
5. LED, LCD (Display Window) Check ····· 5-52
6. Record of Use Check ····· 5-53
7. Switch Check (1) ····· 5-53
8. Switch Check (2) ····· 5-54
9. Headphone Jack Check ····· 5-54

6. REPAIR PARTS LIST

Exploded Views ····· 6-1
6-1-1. Front Panel (D) Block and Battery Panel (P) Block Assembly ····· 6-1
6-1-2. Cabinet (R) Block Assembly ····· 6-2
6-1-3. Cabinet (L) Block and Main Boards Assembly ····· 6-3
6-1-4. EVF Block Assembly ····· 6-4

6-1-5. Zoom Lens (LSV-630A) ····· 6-5
6-1-6. Cassette Compartment Assembly ····· 6-6
6-1-7. LS Chassis Assembly ····· 6-7
6-1-8. Mechanism Chassis Assembly ····· 6-8
6-2. Electrical Parts List ····· 6-9

* The color reproduction frame is shown on page 251.

1. POWER SUPPLY DURING REPAIRS

In this unit, about 10 seconds after power is supplied (8.4V) to the battery terminal using the service power cord (J-6082-223-A), the power is shut off so that the unit cannot operate.
This following two methods are available to prevent this. Take note of which to use during repairs.

Method 1.
Connect the servicing remote commander RM-95 (J-6082-053-B) to the LANC jack, and set the remote commander switch to the "ADJ" side.

Method 2.
Press the battery switch of the battery terminal using adhesive tape, etc.

Method 3.
Use the DC IN terminal. (Use the AC power adaptor.)

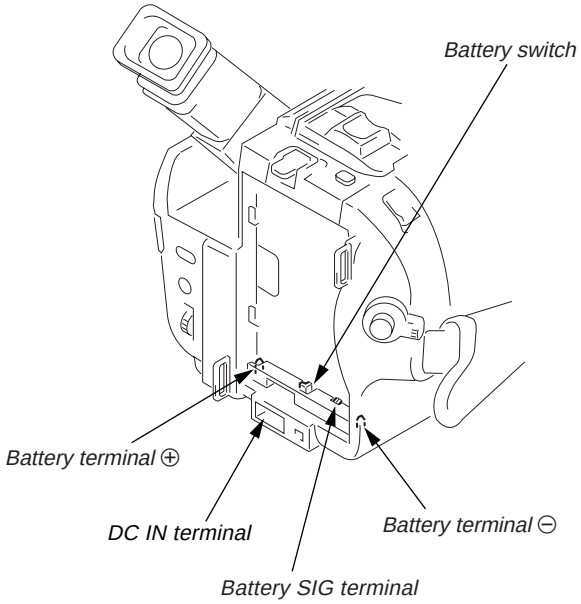

2. TO TAKE OUT A CASSETTE WHEN NOT EJECT (FORCE EJECT)

① Refer to 2-1. to remove the front panel assembly.
② Refer to 2-1. to remove the cabinet (R) assembly.
③ Refer to 2-1. to remove the battery panel assembly.
④ Refer to 2-1. to remove the cabinet (L) assembly.
⑤ Disconnect CN901 of VC-214 board.
⑥ Add +5V from the DC POWER SUPPLY and unload with a pressing the cassette lid.

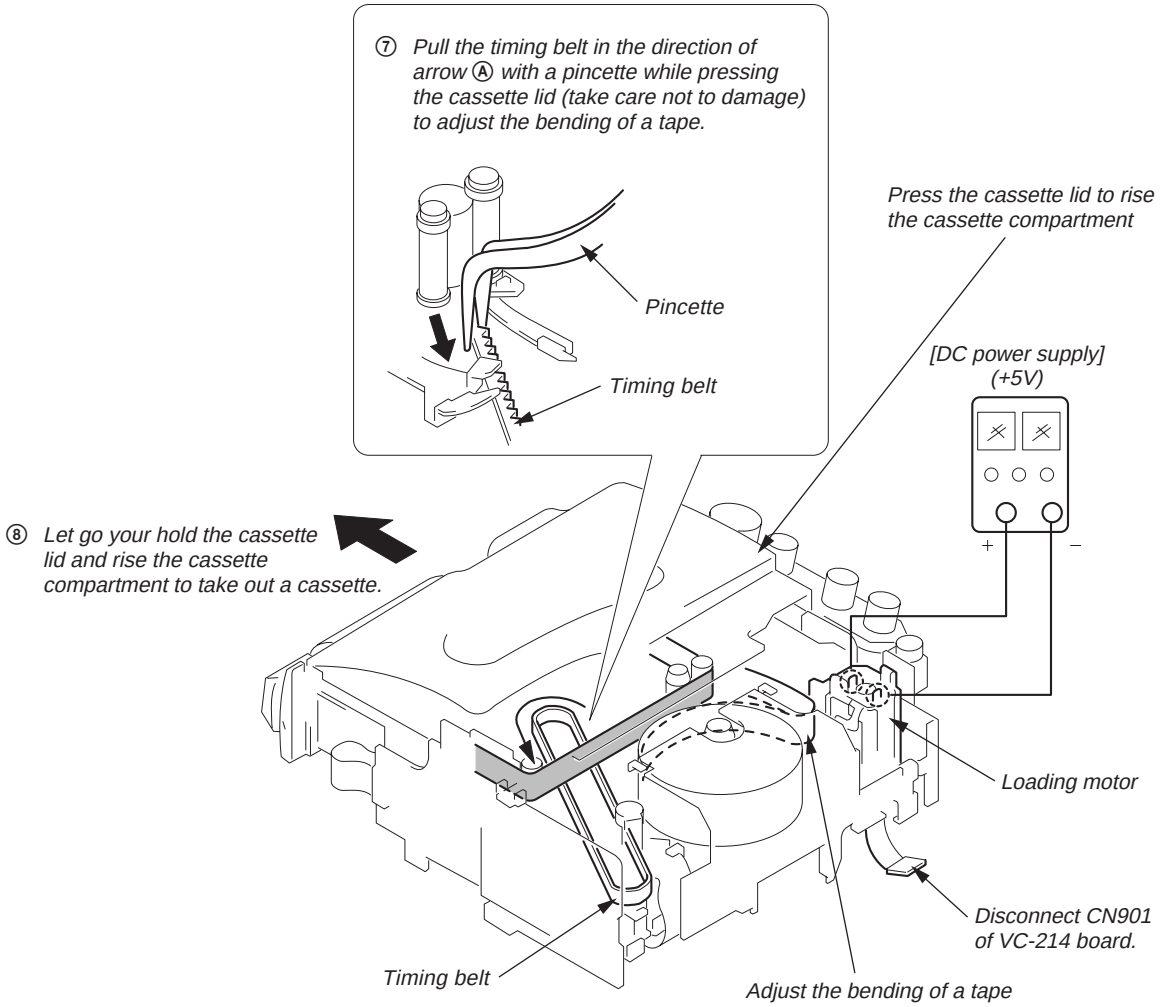
⑦ Pull the timing belt in the direction of arrow Ⓐ with a pincette while pressing the cassette lid (take care not to damage) to adjust the bending of a tape.
Pincette
Timing belt
Press the cassette lid to rise the cassette compartment
[DC power supply] (+5V)
+
–
⑧ Let go your hold the cassette lid and rise the cassette compartment to take out a cassette.
Loading motor
Disconnect CN901 of VC-214 board.
Timing belt
Adjust the bending of a tape

SELF-DIAGNOSIS FUNCTION

1. Self-diagnosis Function

When problems occur while the unit is operating, the self-diagnosis function starts working, and displays on the viewfinder or Display window what to do. This function consists of two display; self-diagnosis display and service mode display.
Details of the self-diagnosis functions are provided in the Instruction manual.

2. Self-diagnosis Display

When problems occur while the unit is operating, the counter of the viewfinder or Display window shows a 4-digit display consisting of an alphabet and numbers, which blinks at 3.2 Hz. This 5-character display indicates the "repaired by:", "block" in which the problem occurred, and "detailed code" of the problem.

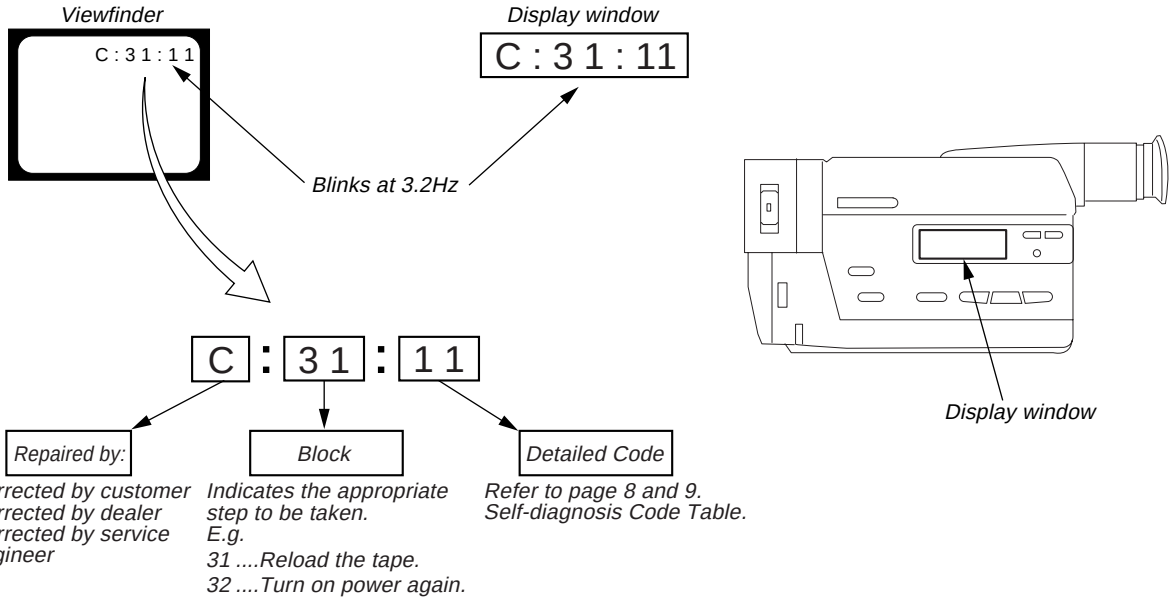

3. Service Mode Display

The service mode display shows up to six self-diagnosis codes shown in the past.

3-1. Display Method

While pressing the "STOP" key, set the switch from OFF to "PLAYER", and continue pressing the "STOP" key for 5 seconds continuously. The service mode will be displayed, and the counter will show the backup No. and the 5-character self-diagnosis codes.

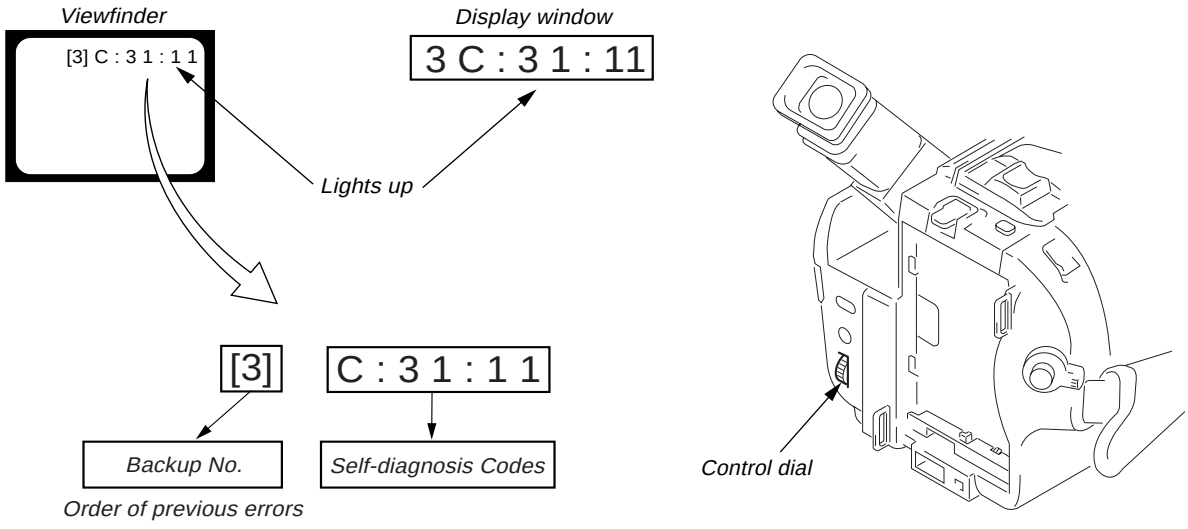

3-2. Switching of Backup No.

By rotating the control dial, past self-diagnosis codes will be shown in order. The backup No. in the [] indicates the order in which the problem occurred. (If the number of problems which occurred is less than 6, only the number of problems which occurred will be shown.)

[1] : Occurred first time [4] : Occurred fourth time
[2] : Occurred second time [5] : Occurred fifth time
[3] : Occurred third time [6] : Occurred the last time

3-3. End of Display

Turning OFF the power supply will end the service mode display.

Note: The "self-diagnosis display" data will be backed up by the coin-type lithium battery (CF-58 board BH001). When this coin-type lithium battery is disconnected, the "self-diagnosis display" data will be lost by initialization.

4. Self-diagnosis Code Table

Self-diagnosis Code				Symptom/State	Correction
Repaired by:	Block Function		Detailed Code		
C	2	1	0 0	Condensation.	Remove the cassette, and insert it again after one hour.
C	2	2	0 0	Video head is dirty.	Clean with the optional cleaning cassette.
C	2	3	0 0	Non-standard battery is used.	Use the InfoLITHIUM battery.
C	3	1	1 0	LOAD direction. Loading does not complete within specified time	Load the tape again, and perform operations from the beginning.
C	3	1	1 1	UNLOAD direction. Loading does not complete within specified time	Load the tape again, and perform operations from the beginning.
C	3	1	2 0	T reel side tape slacking when unloading.	Load the tape again, and perform operations from the beginning.
C	3	1	2 1	S reel side tape slacking when unloading.	Load the tape again, and perform operations from the beginning.
C	3	1	2 2	T reel fault.	Load the tape again, and perform operations from the beginning.
C	3	1	2 3	S reel fault.	Load the tape again, and perform operations from the beginning.
C	3	1	3 0	FG fault when starting capstan.	Load the tape again, and perform operations from the beginning.
C	3	1	3 1	FG fault during normal capstan operations.	Load the tape again, and perform operations from the beginning.
C	3	1	4 0	FG fault when starting drum.	Load the tape again, and perform operations from the beginning.
C	3	1	4 1	PG fault when starting drum.	Load the tape again, and perform operations from the beginning.
C	3	1	4 2	FG fault during normal drum operations.	Load the tape again, and perform operations from the beginning.
C	3	1	4 3	PG fault during normal drum operations.	Load the tape again, and perform operations from the beginning.
C	3	1	4 4	Phase fault during normal drum operations.	Load the tape again, and perform operations from the beginning.
C	3	2	1 0	LOAD direction loading motor time-out.	Remove the battery or power cable, connect, and perform operations from the beginning.
C	3	2	1 1	UNLOAD direction loading motor time-out.	Remove the battery or power cable, connect, and perform operations from the beginning.
C	3	2	2 0	T reel side tape slacking when unloading.	Remove the battery or power cable, connect, and perform operations from the beginning.
C	3	2	2 1	S reel side tape slacking when unloading.	Remove the battery or power cable, connect, and perform operations from the beginning.
C	3	2	2 2	T reel fault.	Remove the battery or power cable, connect, and perform operations from the beginning.
C	3	2	2 3	S reel fault.	Remove the battery or power cable, connect, and perform operations from the beginning.
C	3	2	3 0	FG fault when starting capstan.	Remove the battery or power cable, connect, and perform operations from the beginning.
C	3	2	3 1	FG fault during normal capstan operations.	Remove the battery or power cable, connect, and perform operations from the beginning.
C	3	2	4 0	FG fault when starting drum.	Remove the battery or power cable, connect, and perform operations from the beginning.
C	3	2	4 1	PG fault when starting drum.	Remove the battery or power cable, connect, and perform operations from the beginning.
C	3	2	4 2	FG fault during normal drum operations.	Remove the battery or power cable, connect, and perform operations from the beginning.
C	3	2	4 3	PG fault during normal drum operations.	Remove the battery or power cable, connect, and perform operations from the beginning.
C	3	2	4 4	Phase fault during normal drum operations.	Remove the battery or power cable, connect, and perform operations from the beginning.

Self-diagnosis Code			Symptom/State	Correction
Repaired by:	Block Function	Detailed Code		
E	6 1	0 0	Difficult to adjust focus (Cannot initialize focus.)	Inspect the lens block focus reset sensor (Pin ⑫ of CN551 of VC-214 board) when focusing is performed when the control dial is rotated in the focus manual mode and the focus motor drive circuit (IC552 of VC-214 board) when the focusing is not performed.
E	6 1	1 0	Zoom operations fault (Cannot initialize zoom lens.)	Inspect the lens block zoom reset sensor (Pin ⑭ of CN551 of VC-214 board) when zooming is performed when the zoom lens is operated and the zoom motor drive circuit (IC552 of VC-214 board) when zooming is not performed.
E	6 2	0 0	Steady Shot correction function does not work well. (With pitch angular velocity sensor output stopped.)	Inspect pitch angular velocity sensor (SE451 of SE-85 board) peripheral circuits.
E	6 2	0 1	Steady Shot correction function does not work well. (With yaw angular velocity sensor output stopped.)	Inspect yaw angular velocity sensor (SE452 of SE-85 board) peripheral circuits.

SECTION 1
GENERAL

This section is extracted from instruction manual. (CCD-TR913E/TR950E model)

Checking supplied accessories

Make sure that the following accessories are supplied with your camcorder.

Проверка прилагаемых принадлежностей

Убедитесь, что следующие принадлежности прилагаются к Вашей видеокамере.

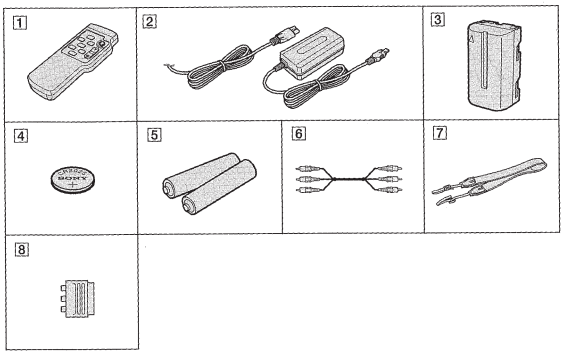

1 **Wireless Remote Commander** (1) (p. 103)

2 **AC-L10A/L10B/L10C AC power adaptor** (1), **Mains lead** (1) (p. 13)

3 **NP-F330 battery pack** (1) (p. 12, 13)

4 **CR2025 lithium battery** (1) (p. 78)
The lithium battery is already installed in your camcorder.

5 **R6 (size AA) battery for Remote Commander** (2) (p. 104)

6 **A/V connecting cable** (1) (p. 29)

7 **Shoulder strap** (1) (p. 100)

8 **21 pin adaptor** (1) (p. 29)

1 **Беспроводный пульт дистанционного управления** (1) (стр. 103)

2 **Сетевой адаптер переменного тока AC-L10A/L10B/L10C** (1), **Провод электропитания** (1) (стр. 13)

3 **Батарейный блок NP-F330** (1) (стр. 12, 13)

4 **Литиевая батарейка CR2025** (1) (стр. 78)
Литиевая батарейка уже установлена в Вашей видеокамере.

5 **Батарейка R6 (размера AA) для пульта дистанционного управления** (2) (стр. 104)

6 **Соединительный кабель аудио/видео** (1) (стр. 29)

7 **Плечевой ремень** (1) (стр. 100)

8 **21-штырьковый адаптер** (1) (стр. 29)

Contents of the recording cannot be compensated if recording or playback is not made due to a malfunction of the camcorder, video tape, etc.

Содержание записи не может быть компенсировано в случае, если запись или воспроизведение не выполнены из-за неисправности видеокамеры, видеоленты и т.п.

English

Quick Start Guide

This chapter introduces you to the basic features of your camcorder. See the page in parentheses "( )" for more information.

1 Connecting the mains lead (p. 17)

Use the battery pack when using your camcorder outdoors (p. 12).

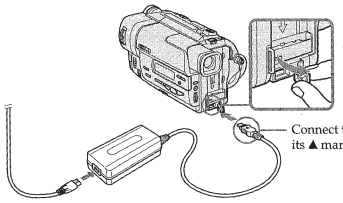

2 Inserting a cassette (p. 18)

1 Slide EJECT in the direction of the arrow while pressing the small blue button.

2 Insert a cassette into the cassette compartment with its window facing out.

3 Close the cassette compartment by pressing the "PUSH" mark on the cassette compartment. The cassette compartment automatically goes down.

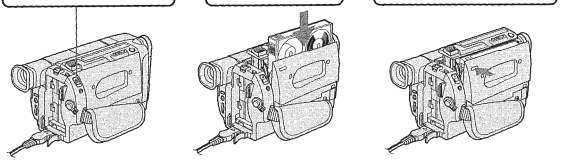

3 Recording a picture (p. 19)

1 Set the POWER switch to CAMERA while pressing the small green button.

2 Turn STANDBY to STANDBY. The picture appears in the viewfinder.

3 Press the red button. Your camcorder starts recording. To stop recording, press the red button again.

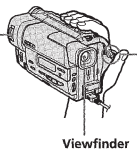

Viewfinder
Use the viewfinder placing your eye against its eyecup.

4 Monitoring the playback picture in the viewfinder (p. 32)

1 Set the POWER switch to PLAYER while pressing the small green button.

2 Press ◄◄ to rewind the tape.

3 Press ► to start playback.

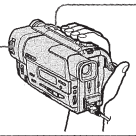

NOTE
Do not pick up your camcorder by holding the viewfinder.

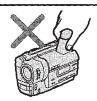

— Getting started —

Using this manual

The instructions in this manual are for the two models listed in the table below. Before you start reading this manual and operating your camcorder, check the model number by looking at the bottom of your camcorder. The CCD-TR950E is the model used for illustration purposes. Otherwise, the model name is indicated in the illustrations. Any differences in operation are clearly indicated in the text, for example, "CCD-TR950E only."
As you read through this manual, buttons and settings on your camcorder are shown in capital letters.
e.g. Set the POWER switch to CAMERA.
When you carry out an operation, you can hear a beep sound to indicate that the operation is being carried out.

Types of differences

CCD-	TR913E	TR950E
Viewfinder	B/W	colour

— Подготовка к эксплуатации —

Использование данного руководства

Инструкции в данном руководстве предназначены для двух моделей, указанных в приведенной ниже таблице. Прежде, чем прочесть данное руководство, и начать эксплуатацию Вашей видеокамеры, проверьте номер модели на нижней стороне видеокамеры. Для иллюстративных целей используется модель CCD-TR950E. Или же наименование модели указано на рисунках.
Всякие отличия по эксплуатации четко указаны в тексте, например, "только модель CCD-TR950E".
При чтении данного руководства учитывайте, что кнопки и установки на видеокамере показаны заглавными буквами.
Прим. Установите выключатель POWER в положение CAMERA.
При выполнении операции на видеокамере Вы сможете услышать зуммерный сигнал, подтверждающий выполнение операции.

Типы отличий

CCD-	TR913E	TR950E
Видоискатель	Черно/белый	Цветной

Using this manual

Note on TV colour systems

TV colour systems differ from country to country. To view your recordings on a TV, you need a PAL system-based TV.

Copyright precautions

Television programmes, films, video tapes, and other materials may be copyrighted. Unauthorized recording of such materials may be contrary to the provision of the copyright laws.

Precautions on camcorder care

- **The colour viewfinder is manufactured using high-precision technology. However, there may be some tiny black spots and/or bright spots (red, blue or green in colour) that constantly appear in the viewfinder. These spots occur normally in the manufacturing process and do not affect the recorded picture in any way. Effective number of pixels is 99.99% or more. (CCD-TR950E only)**
- Do not let your camcorder get wet. Keep your camcorder away from rain and sea water. Letting your camcorder get wet may cause your camcorder to malfunction. Sometimes this malfunction cannot be repaired **[a]**.
- Never leave your camcorder exposed to temperatures above 60°C (140°F), such as in a car parked in the sun or under direct sunlight **[b]**.
- Do not place your camcorder so as to point the viewfinder toward the sun. The inside of the viewfinder may be damaged **[c]**.

Использование данного руководства

Примечание по системам цветного телевидения

Системы цветного телевидения отличаются в зависимости от страны. Для просмотра Ваших записей на экране телевизора Вам необходимо использовать телевизор, основанный на системе PAL.

Предостережение об авторском праве

Телевизионные программы, кинофильмы, видеоленты и другие материалы могут быть защищены авторским правом. Нелицензированная запись таких материалов может противоречить положениям закона об авторском праве.

Меры предосторожности при уходе за видеокамерой

- **Видоискатель изготовлен с помощью высокопрецизионной технологии. Однако на экране ЖКД и/или в видоискателе могут постоянно появляться черные или яркие цветные точки (красные, синие или зеленые). Появление этих точек вполне нормально для процесса съемки и никоим образом не влияет на записываемое изображение. Свыше 99,99% экрана предназначено для эффективного использования (только модель CCD-TR950E).**
- Не допускайте, чтобы видеокамера становилась влажной. Предохраняйте видеокамеру от дождя и морской воды. Если Вы намочите видеокамеру, то это может привести к неисправности аппарата, которая не всегда может быть устранена **[a]**.
- Никогда не оставляйте видеокамеру в месте с температурой выше 60°C (140°F), как, например, в автомобиле, оставленном на солнце или под прямым солнечным светом **[b]**.
- Не располагайте свою видеокамеру таким образом, чтобы видоискатель был направлен на солнце. Иначе может быть повреждено внутреннее устройство видоискателя **[c]**.

[a]

[b]

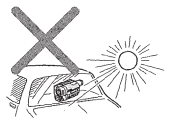

[c]

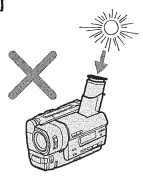

Getting started/Подготовка к эксплуатации

Step 1 Preparing the power supply

Installing the battery pack

Install the battery pack to use your camcorder outdoors.

Slide the battery pack down.

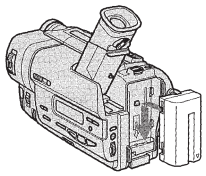

To remove the battery pack

Slide the battery pack out in the direction of the arrow while pressing ↓ BATT RELEASE down.

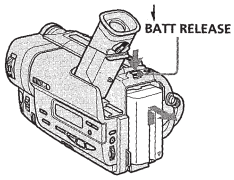

After installing the battery pack

Do not carry your camcorder by holding the battery pack. If you do so, the battery pack may slide off your camcorder unintentionally, damaging your camcorder.

Пункт 1 Подготовка источника питания

Установка батарейного блока

Установите батарейный блок для того, чтобы использовать Вашу видеокамеру вне помещения.

Передвиньте батарейный блок вниз.

Для снятия батарейного блока

Передвиньте батарейный блок в направлении стрелки, нажав кнопку ↓ BATT RELEASE вниз.

После установки батарейного блока

Не переносите свою видеокамеру, взявшись за батарейный блок. Если Вы так сделаете, батарейный блок может непроизвольно соскользнуть с Вашей видеокамеры и повредить ее.

Step 1 Preparing the power supply

Charging the battery pack

Use the battery pack after charging it for your camcorder.
Your camcorder operates only with the "InfoLITHIUM" battery pack (L series).

"InfoLITHIUM" is a trademark of Sony Corporation.

(1) Open the DC IN jack cover and connect the AC power adaptor supplied with your camcorder to the DC IN jack with the plug's ▲ mark facing up.
(2) Connect the mains lead to the AC power adaptor.
(3) Connect the mains lead to the mains.
(4) Set the POWER switch to OFF. Charging begins. The remaining battery time is indicated in minutes on the display window. When the remaining battery indicator changes to , **normal charge** is completed. To fully charge the battery **(full charge)**, leave the battery pack attached for about 1 hour after normal charge is completed until FULL appears in the display window. Fully charging the battery allows you to use the battery longer than usual.

Пункт 1 Подготовка источника питания

Зарядка батарейного блока

Используйте батарейный блок для Вашей видеокамеры после его зарядки.
Ваша видеокамера работает только с батарейным блоком "InfoLITHIUM" (серии L).

"InfoLITHIUM" является фирменным знаком корпорации Sony.

(1) Откройте крышку гнезда DC IN и подсоедините сетевой адаптер переменного тока, прилагаемый к Вашей видеокамере, к гнезду DC IN, так чтобы штекер ▲ был направлен вверх.
(2) Подсоедините провод электропитания к сетевому адаптеру переменного тока.
(3) Подсоедините провод электропитания к сетевой розетке.
(4) Установите переключатель POWER в положение OFF. Начнется зарядка. В окошке дисплея будет отображаться время оставшегося заряда в минутах. Если индикатор оставшегося заряда изменится на , это значит, что **нормальная зарядка** завершена. Для полной зарядки батарейного блока **(полная зарядка)** оставьте батарейный блок прикрепленным на месте приблизительно на один час после завершения нормальной зарядки до тех пор, пока в окошке дисплея не появится индикация FULL. Полная зарядка батарейного блока позволяет Вам использовать батарейный блок дольше чем обычно.

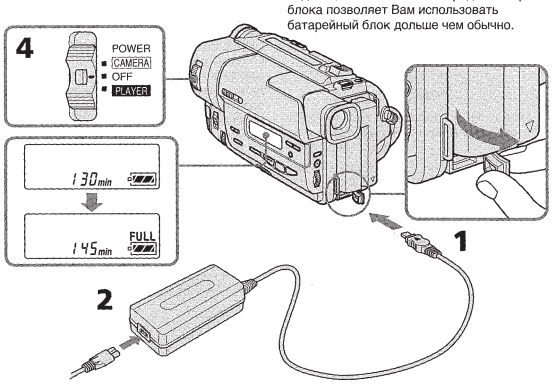

Getting started/Подготовка к эксплуатации

Step 1 Preparing the power supply

Note

Prevent metallic objects from coming into contact with the metal parts of the DC plug of the AC power adaptor. This may cause a short-circuit, damaging the AC power adaptor.

Remaining battery time indicator

The remaining battery time indicator in the display window roughly indicates the recording time.

Battery pack

The battery pack is charged a little before it leaves the factory.

Until your camcorder calculates the actual remaining battery time

"– – – – min" appears in the display window.

If there is a slight difference in shape between the plug of mains lead and the terminal of AC power adaptor

It is ignorable for their mutual connection and power supply.

Plug the mains lead deeply

Be sure to plug the mains lead deeply into the terminal of AC power adaptor so that it is firmly locked. If there is a gap between the plug of mains lead and the terminal of AC power adaptor, it does not affect the efficiency of the AC power adaptor.

Пункт 1 Подготовка источника питания

Примечание

Не допускайте контакта металлических предметов с металлическими частями штекера постоянного тока DC и адаптера переменного тока. Это может привести к короткому замыканию и повреждению адаптера переменного тока.

Индикатор времени оставшегося заряда батарейного блока

Индикатор времени оставшегося заряда батарейного блока в окошке дисплея приблизительно указывает время записи с помощью видоискателя.

Батарейный блок

Батарейный блок уже немного заряжен на предприятии-изготовителе.

До тех пор, пока Ваша видеокамера определит действительное время оставшегося заряда батарейного блока

В окошке дисплея будет отображаться индикация "– – – – min".

В случае отличия формы штекера провода электропитания и гнезда сетевого адаптера переменного тока

Соединение между ними и источником питания невозможно.

Подсоединяйте шнур электропитания плотно

Проверьте, чтобы штекер провода электропитания был плотно подсоединен к гнезду сетевого адаптера переменного тока. Если будет зазор между штекером провода электропитания и гнездом сетевого адаптера переменного тока, то сетевой адаптер переменного тока может не работать.

Step 1 Preparing the power supply

Пункт 1 Подготовка источника питания

Charging time/Время зарядки

Battery pack Батарейный блок	Full charge (Normal charge) Полная зарядка (Нормальная зарядка)
NP-F330 (supplied/прилагается)	150 (90)
NP-F530/F550	210 (150)
NP-F730/F750	300 (240)
NP-F930/F950	390 (330)

Approximate number of minutes to charge an empty battery pack

Приблизительное время в минутах для зарядки полностью разряженного батарейного блока

Recording time/Время записи

CCD-TR913E

Battery pack Батарейный блок	Continuous* Непрерывная*	Typical** Типичная**
NP-F330 (supplied/прилагается)	140 (125)	75 (65)
NP-F530	245 (220)	130 (120)
NP-F550	280 (250)	150 (135)
NP-F730	500 (450)	270 (245)
NP-F750	580 (525)	315 (285)
NP-F930	780 (705)	420 (380)
NP-F950	900 (790)	485 (425)

CCD-TR950E

Battery pack Батарейный блок	Continuous* Непрерывная*	Typical** Типичная**
NP-F330 (supplied/прилагается)	145 (130)	80 (70)
NP-F530	260 (230)	140 (125)
NP-F550	295 (260)	160 (140)
NP-F730	525 (475)	285 (255)
NP-F750	610 (550)	330 (295)
NP-F930	825 (740)	445 (400)
NP-F950	930 (830)	505 (450)

Approximate number of minutes when you use a fully charged battery

Numbers in parentheses "( )" indicate the time using a normally charged battery.

* Approximate continuous recording time at 25°C (77°F). The battery life will be shorter if you use your camcorder in a cold environment.

** Approximate number of minutes when recording while you repeat start/stop, zooming and turning the power on/off. The actual battery life may be shorter.

Приблизительное время в минутах при использовании полностью заряженного батарейного блока

Числа в скобках "( )" указывают время при использовании батарейного блока с нормальной зарядкой.

* Приблизительное время непрерывной записи при температуре 25°C (77°F). При использовании видеокамеры в холодных условиях срок службы батарейного блока будет короче.

** Приблизительное время в минутах при записи с неоднократным пуском/остановом записи, наездом видеокамеры и включением/выключением питания. Фактический срок службы заряда батарейного блока может быть короче.

Step 1 Preparing the power supply

Пункт 1 Подготовка источника питания

Playing time/Время воспроизведения

CCD-TR913E

Battery pack Батарейный блок	
NP-F330 (supplied/прилагается)	135 (120)
NP-F530	235 (210)
NP-F550	270 (240)
NP-F730	475 (425)
NP-F750	550 (500)
NP-F930	745 (670)
NP-F950	850 (760)

CCD-TR950E

Battery pack Батарейный блок	
NP-F330 (supplied/прилагается)	140 (125)
NP-F530	245 (220)
NP-F550	280 (250)
NP-F730	500 (450)
NP-F750	580 (525)
NP-F930	780 (705)
NP-F950	900 (790)

Approximate number of minutes when you use a fully charged battery

Numbers in parentheses "( )" indicate the time using a normally charged battery. The battery life will be shorter if you use your camcorder in a cold environment.

After charging the battery pack
Disconnect the AC power adaptor from the DC IN jack on your camcorder.

Note on the remaining battery time indicator during recording
The indicator may not be correct, depending on the conditions in which you are recording.

What is "InfoLITHIUM"?
The "InfoLITHIUM" is a lithium ion battery pack which can exchange data such as battery consumption with compatible video equipment. This unit is compatible with the "InfoLITHIUM" battery pack (L series). Your camcorder operates only with the "InfoLITHIUM" battery. "InfoLITHIUM" battery packs have the *InfoLITHIUM* mark.
"InfoLITHIUM" is a trademark of Sony Corporation.

Приблизительное время в минутах при использовании полностью заряженного батарейного блока

Числа в скобках "( )" указывают время при использовании батарейного блока с нормальной зарядкой. При использовании видеокамеры в холодных условиях срок службы батарейного блока будет короче.

После зарядки батарейного блока
Отсоедините сетевой адаптер переменного тока от гнезда DC IN на Вашей видеокамере.

Примечание по индикатору времени оставшегося заряда батарейного блока во время записи
Индикатор может быть неправильным в зависимости от условий, в которых выполняется запись.

Что такое "InfoLITHIUM"?
"InfoLITHIUM" представляет собой литиево-ионный батарейный блок, который может обмениваться данными, такими как потребление заряда батарейного блока, с совместимой видеоаппаратурой. Это устройство совместимо с батарейным блоком "InfoLITHIUM" (серии L). Эта видеокамера работает только с батарейным блоком "InfoLITHIUM". На батарейных блоках "InfoLITHIUM" имеется знак *InfoLITHIUM*. "InfoLITHIUM" является торговой маркой корпорации Sony Corporation.

Step 1 Preparing the power supply

Пункт 1 Подготовка источника питания

Connecting to the mains

Подсоединение к сетевой розетке

When you use your camcorder for a long time, we recommend that you power it from the mains using the AC power adaptor.

(1) Open the DC IN jack cover, and connect the AC power adaptor to the DC IN jack on your camcorder with the plug's ▲ mark facing up.
(2) Connect the mains lead to the AC power adaptor.
(3) Connect the mains lead to the mains.

Если Вы собираетесь использовать видеокамеру длительное время, рекомендуется использовать питание от электрической сети с помощью сетевого адаптера переменного тока.

(1) Откройте крышку гнезда DC IN и подсоедините сетевой адаптер переменного тока к гнезду DC IN на Вашей видеокамере, так чтобы знак ▲ на штекере был обращен вверх.
(2) Подсоедините провод электропитания к сетевому адаптеру переменного тока.
(3) Подсоедините провод электропитания к сетевой розетке.

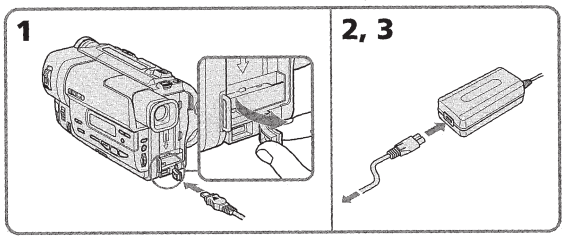

WARNING
The mains lead must only be changed at a qualified service shop.

PRECAUTION
The set is not disconnected from the AC power source (mains) as long as it is connected to the mains, even if the set itself has been turned off.

Notes
- The AC power adaptor can supply power even if the battery pack is attached to your camcorder.
- The DC IN jack has "source priority". This means that the battery pack cannot supply any power if the mains lead is connected to the DC IN jack, even when the mains lead is not plugged into the mains.
- Keep the AC power adaptor away from the camcorder if the picture is disturbed.

Using a car battery
Use Sony DC Adaptor/Charger (not supplied).

ПРЕДУПРЕЖДЕНИЕ
Сетевой провод должен быть заменен только в мастерской квалифицированного обслуживания.

ПРЕДОСТЕРЕЖЕНИЕ
Аппарат не отключается от источника питания перем. тока (электрической сети) до тех пор, пока он подключен к электрической сети, даже если сам аппарат выключен.

Примечания
- Питание от сетевого адаптера переменного тока может подаваться даже в случае, если батарейный блок прикреплен к Вашей видеокамере.
- Гнездо DC IN имеет "приоритет источника". Это значит, что питание от батарейного блока не может подаваться, если провод электропитания подсоединен к гнезду DC IN, даже если провод электропитания и не подсоединен к к сетевой розетке.
- Держите сетевой адаптер переменного тока подальше от видеокамеры, если изображение содержит помехи.

Использование автомобильного аккумулятора
При этом следует использовать адаптер/зарядное устройство постоянного тока Sony (не прилагается).

Step 2 Inserting a cassette

Пункт 2 Установка кассеты

When you want to record in the Hi8 system, use Hi8 video cassette **Hi8**.

(1) Slide EJECT in the direction of the arrow while pressing the small blue button. The cassette compartment automatically lifts up and opens.
(2) Insert a cassette with its window facing out and the tab on the cassette up.
(3) Close the cassette compartment by pressing the "PUSH" mark on the cassette compartment. The cassette compartment automatically goes down.

Если Вы хотите выполнять запись в системе Hi8, используйте видеокассету Hi8 **Hi8**.

(1) Нажав маленькую синюю кнопку, передвиньте переключатель EJECT в направлении стрелки. Отсек для кассеты автоматически поднимется вверх и откроется.
(2) Вставьте кассету, так чтобы окошку было обращено наружу, а лепесток на кассете вверх.
(3) Закройте отсек для кассеты, нажав метку "PUSH" на отсеке. Отсек для кассеты автоматически опустится вниз.

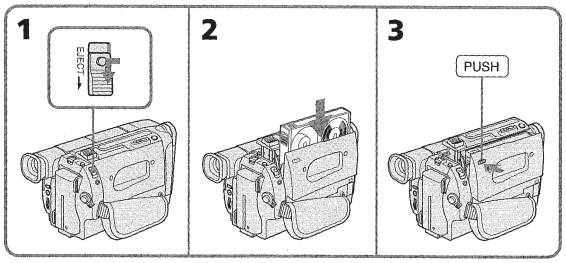

To eject a cassette
Slide EJECT in the direction of the arrow while pressing the small blue button.

Note
Do not press the cassette compartment down. Doing so may cause malfunction.

To prevent accidental erasure
Slide the write-protect tab on the cassette to expose the red mark.

Для извлечения кассеты
Нажав маленькую синюю кнопку, передвиньте переключатель EJECT в направлении стрелки.

Примечание
Не нажимайте вниз отсек для кассеты. Это может привести к неисправности.

Для предотвращения случайного стирания
Передвиньте лепесток защиты записи на кассете, так чтобы появилась красная метка.

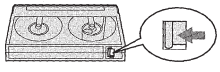

Recording a picture

Your camcorder automatically focuses for you.

(1) Install the power source and insert a cassette. See "Step 1" and "Step 2" for more information (p. 12 to 18).

(2) Set the POWER switch to CAMERA while pressing the small green button. The lens cover opens.

(3) Turn STANDBY to STANDBY.

(4) Press START/STOP. Your camcorder starts recording. The "REC" indicator appears. The camera recording lamp located on the front of your camcorder lights up. To stop recording, press START/STOP again.
The recording lamp lights up in the viewfinder. (CCD-TR913E only)

Запись изображения

Ваша видеокамера автоматически выполняет фокусировку за Вас.

(1) Установите источник питания и вставьте кассету. Подробные сведения приведены в "Пункте 1" и "Пункте 2" (стр. 12 – 18).

(2) Нажав маленькую зеленую кнопку, установите переключатель POWER в положение CAMERA. Откроется крышка объектива.

(3) Поверните рычаг STANDBY в положение STANDBY.

(4) Нажмите кнопку START/STOP. Ваша видеокамера начнет запись. Появится индикатор "REC". Высветится также лампочка записи на передней панели видеокамеры. Для остановки записи нажмите кнопку START/STOP еще раз. В видоискателе будет высвечиваться лампочка записи (только модель CCD-TR913E).

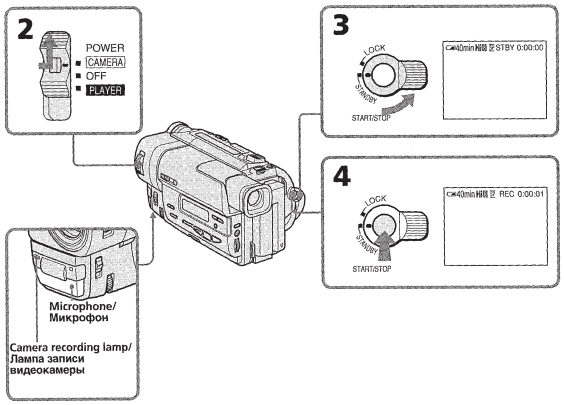

Recording a picture

Note
Fasten the grip strap firmly. Do not touch the built-in microphone during recording.

To enable smooth transition
You can make the transition between the last scene you recorded and the next scene smooth as long as you do not eject the cassette. When you exchange the battery pack in the recording mode, set STANDBY to LOCK.

If you leave your camcorder in the standby mode for 5 minutes while the cassette is inserted
Your camcorder automatically turns off. This is to save battery power and to prevent battery and tape wear. To resume the standby mode, turn STANDBY down and up again. To start recording, press START/STOP.

To set the counter to 0:00:00
Press COUNTER RESET (p. 101).

After recording

(1) Turn STANDBY down to LOCK.
(2) Eject the cassette.
(3) Set the POWER switch to OFF.

After use your camcorder
Remove the battery pack from your camcorder to avoid turning on the built-in light.

Запись изображения

Примечания
Плотно пристегните ремень для захвата видеокамеры. Не прикасайтесь к встроенному микрофону во время записи.

Для обеспечения плавного перехода
Вы можете выполнять плавный переход между последним записанным эпизодом и следующим эпизодом до тех пор, пока не извлечете кассету. При замене батарейного блока в режиме записи установите рычаг STANDBY в положение LOCK.

Если Вы оставите Вашу видеокамеру в режиме готовности на 5 минут при вставленной кассете
Видеокамера выключится автоматически. Это предотвращает расход заряда батарейного блока и износ ленты. Для возобновления режима готовности поверните рычаг STANDBY вниз и снова вверх. Для начала записи нажмите кнопку START/STOP.

Для установки счетчика в положение 0:00:00
Нажмите кнопку COUNTER RESET (стр. 101).

После записи

(1) Поверните рычаг STANDBY в положение LOCK.
(2) Извлеките кассету.
(3) Установите переключатель POWER в положение OFF.

После пользования видеокамерой
Выньте батарейный блок из Вашей видеокамеры во избежание включения встроенной подсветки.

Recording a picture

To record pictures with the viewfinder – adjusting the viewfinder

Adjust the viewfinder lens to your eyesight so that the indicators in the viewfinder come into sharp focus.

Lift up the viewfinder and move the viewfinder lens adjustment lever.

Запись изображения

Для записи изображений с помощью видоискателя – регулировка видоискателя

Отрегулируйте объектив видоискателя в соответствии со своим зрением, так чтобы индикаторы в видоискателе были четко сфокусированы.

Поднимите видоискатель и подвигайте рычаг регулировки объектива видоискателя.

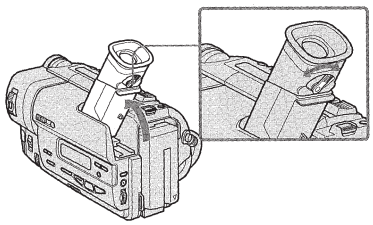

Recording a picture

Using the zoom feature

Move the power zoom lever a little for a slower zoom. Move it further for a faster zoom.
Using the Zoom function sparingly results in better-looking recordings.
"T" side: for telephoto (subject appears closer)
"W" side: for wide-angle (subject appears farther away)

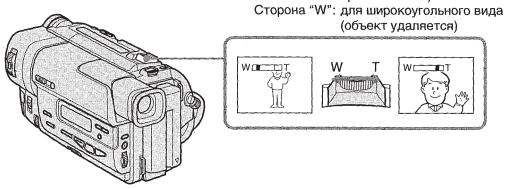

Zoom greater than 20× is performed digitally.

The right side of the bar shows the digital zooming zone./
Правая сторона полосы на экране показывает зону цифровой трансфокации.

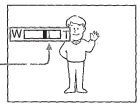

When you shoot close to a subject
If you cannot get a sharp focus, move the power zoom lever to the "W" side until the focus is sharp. You can shoot a subject that is at least about 80 cm (about 2 feet 5/8 inch) away from the lens surface in the telephoto position, or about 1 cm (about 1/2 inch) away in the wide-angle position.

Notes on digital zoom
- Digital zoom starts to function when zoom exceeds 20×.
- The picture quality deteriorates as you go toward the "T" side. Set D ZOOM to OFF in the MENU settings. Otherwise the digital zoom activates without notice (p. 64).

Запись изображения

Использование функции наезда видеокамеры

Передвиньте рычаг приводного вариообъектива слегка для относительно медленного наезда видеокамеры. Передвиньте его сильнее для ускоренного наезда видеокамеры.
Использование функции наезда видеокамеры в небольшом количестве обеспечивает наилучшие результаты.
Сторона "T": для телефото (объект приближается)
Сторона "W": для широкоугольного вида (объект удаляется)

Наезд видеокамеры более 20х выполняется цифровым методом.

При съемке объекта с близкого положения
Если Вы не можете получить четкой фокусировки, передвиньте рычаг приводного вариообъектива сторону "W" до получения четкой фокусировки. Вы можете выполнять съемку объекта в положении телефото, который отстоит по крайней мере на расстоянии 80 см от поверхности объектива или же около 1 см в положении широкоугольного вида.

Примечания к наезду видеокамеры цифровым методом
- Цифровой вариообъектив начинает срабатывать в случае, если наезд видеокамеры превышает 20х.
- Качество изображения ухудшается по мере приближения к стороне "T". Установите фукцию D ZOOM в установках MENU в положение OFF. В противном случае цифровой вариообъектив будет срабатывать без уведомления (стр. 64).

START/STOP MODE setting

⏚: Recording starts when you press START/STOP, and stops when you press it again (factory setting).

ANTI GROUND SHOOTING ⏚:
The camcorder records only while you press START/STOP. Use this mode to avoid recording unnecessary scenes.

5SEC: When you press use this mode to START/STOP, your camcorder records for 5 seconds and then stops automatically.

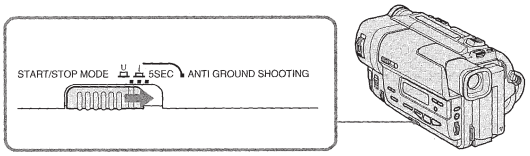

Notes

- You cannot use the fader function in the 5SEC or ⏚ mode.
- The tape counter does not appear in the 5SEC mode.

To extend the recording time in the 5SEC mode

Five dots (●●●●●) appear, and then disappear at a rate of one per second. To extend the recording time, press START/STOP again before all the dots disappear. Recording continues for about 5 seconds from the moment you press START/STOP.

Установка START/STOP MODE

⏚: При нажатии кнопки START/STOP начнется запись, а при повторном нажатии этой кнопки запись (заводская установка).

ANTI GROUND SHOOTING ⏚:
Видеокамера будет выполнять запись только при нажатии кнопки START/STOP. Используйте этот режим для избежания записи нежелательных эпизодов.

5SEC: Если Вы нажмете кнопку START/STOP, видеокамера будет выполнять запись в течение 5 секунд, а затем автоматически остановится.

Примечания

- Вы не можете использовать функцию фейдера в режиме 5SEC или режиме ⏚.
- В режиме 5SEC счетчик ленты не появляется.

Для удлинения времени записи в режиме 5SEC

Пять точек (●●●●●) будут появляться, а затем исчезать по одной за секунду. Для удлинения времени записи нажмите кнопку START/STOP перед тем, как исчезнут все точки. Запись будет продолжаться около 5 секунд с момента нажатия кнопки START/STOP.

Indicators displayed in the recording mode

The indicators are not recorded on tape.

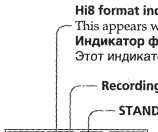

Hi8 format indicator
This appears while playing back or recording in Hi8 format./
Индикатор формата Hi8
Этот индикатор появляется во время воспроизведения или записи в формате Hi8.

Recording mode indicator/Индикатор режима записи

STANDBY/REC indicator/Индикатор STANDBY/REC

Tape counter/Счетчик ленты

Remaining tape indicator
This appears after you insert a cassette and record or play back for a while.
Индикатор оставшейся ленты
Этот индикатор появляется после установки кассеты и записи или воспроизведения ее некоторое время.

Remaining battery time indicator/
Индикатор времени оставшегося заряда батарейного блока

Shooting backlit subjects (BACK LIGHT)

When you shoot a subject with the light source behind the subject or a subject with a light background, use the backlight function.

Press BACK LIGHT in the recording or standby mode.
The ▣ indicator appears in the viewfinder.
To cancel, press BACK LIGHT again.

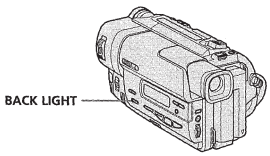

If you press EXPOSURE when shooting backlit subjects
The backlight function will be canceled.

Индикаторы, отображаемые в режиме записи

Индикаторы не записываются на ленту.

Съемка объектов с задней подсветкой (BACK LIGHT)

Если Вы выполняете съемку объекта с источником света позади него или же объект со световым фоном, используйте функцию задней подсветки.

Нажмите кнопку BACK LIGHT в режиме записи или ожидания.
В видоискателе появится индикатор ▣.
Для отмены нажмите кнопку BACK LIGHT еще раз.

Если Вы нажмете кнопку EXPOSURE при выполнении съемки объектов с задней подсветкой
Функция задней подсветки будет отменена.

Shooting in the dark (NightShot)

The NightShot function enables you to shoot a subject in a dark place. For example, you can satisfactorily record the environment of nocturnal animals for observation when you use this function.

(1) While your camcorder is in the standby mode, slide NIGHTSHOT to ON.
(2) Press START/STOP to start recording.
▣ and "NIGHTSHOT" indicators flash in the viewfinder. To cancel the NightShot function, slide NIGHTSHOT to OFF.

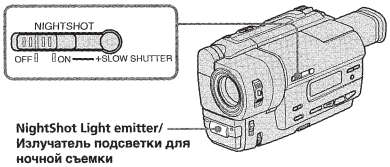

NightShot Light emitter/
Излучатель подсветки для ночной съемки

Using +SLOW SHUTTER

The NightShot +Slow shutter mode makes subjects more than four times brighter than those recorded in the NightShot mode.

(1) Slide NIGHTSHOT to ON in the standby mode. ▣ indicator appears.
(2) Press +SLOW SHUTTER until the desired NIGHTSHOT indicator flashes.
The indicator changes as follows:
▣ (NightShot) → ▣1 (NightShot +Slow shutter1) → ▣2 (NightShot +Slow shutter2) → ▣ (NightShot)
To cancel the NightShot +Slow shutter mode, slide NIGHTSHOT to OFF.

Using the NightShot Light

The picture will be clearer with the NightShot Light on. To enable NightShot Light, set N.S.LIGHT to ON in the MENU settings (p. 64).

Съемка в темноте (Ночная съемка)

Функция ночной съемки позволяет Вам выполнять съемку объектов в темных местах. Например, Вы сможете с успехом выполнять съемку ночных животных для наблюдения при использовании данной функции.

(1) В то время, когда видеокамера находится в режиме ожидания, передвиньте переключатель NIGHTSHOT в положение ON.
(2) Нажмите кнопку START/STOP для начала записи.
Индикаторы ▣ и "NIGHTSHOT" начнут мигать на экране ЖКД или в видоискателе. Для отмены функции ночной съемки передвиньте переключатель NIGHTSHOT в положении OFF.

Использование режима +SLOW SHUTTER

Режим ночной съемки +медленного затвора позволяет сделать объекты более чем в четыре раза ярче, чем в случае, если Вы будете выполнять съемку в темноте в режиме ночной съемки.

(1) Передвиньте переключатель NIGHTSHOT в положение ON в режиме ожидания. Появится индикатор ▣.
(2) Нажимайте кнопку +SLOW SHUTTER до тех пор, пока не начнет мигать нужный индикатор NIGHTSHOT.
Индикатор будет изменяться следующим образом:
▣ (Ночная съемка) → ▣1 1 (Ночная съемка +медленный затвор1) → ▣22 (Ночная съемка +медленный затвор2) → ▣ (Ночная съемка)
Для отмены режима ночной съемки +медленного затвора передвиньте переключатель NIGHTSHOT в положение OFF.

Использование подсветки для ночной съемки

При включенной подсветке для ночной съемки изображение будет более четким. Для включения подсветки для ночной съемки установите команду N.S.LIGHT в положение ON в установках MENU (стр. 64).

Notes

- Do not use the NightShot function in bright places (ex. outdoors in the daytime). This may cause your camcorder to malfunction.
- When you keep setting NIGHTSHOT to ON in normal recording, the picture may be recorded in incorrect or unnatural colours.
- If focusing is difficult with the autofocus mode when using the NightShot function, focus manually.

While using the NightShot function, you can not use the following functions:

– Exposure
– PROGRAM AE
– Fader*
– Digital effect*

* You cannot use these functions only in the NightShot +Slow shutter mode.

Shutter speed in the NightShot +Slow shutter mode

Shutter speed number	Shutter speed
+SLOW SHUTTER1	1/12
+SLOW SHUTTER2	1/3

The +SLOW SHUTTER button does not work:

– while the fader function is set or in use
– while the digital effect function is in use
– when NIGHTSHOT is set to OFF

NightShot Light

NightShot Light rays are infrared and so are invisible. The maximum shooting distance using the NightShot Light is about 3 m (10 feet). The shooting distance will be twice or more in the NightShot +Slow shutter mode.

Примечания

- Не используйте функцию ночной съемки в ярких местах (например, на улице в дневное время). Это может привести к неисправности Вашей видеокамеры.
- При удержании установки NIGHTSHOT в положении ON при нормальной записи изображение может быть записано в неправильных или неестественных цветах.
- Если фокусировка затруднена в автоматическом режиме при использовании функции ночной съемки, выполните фокусировку вручную.

При использовании функции ночной съемки Вы не можете использовать следующие функции:

– Экспозиция
– PROGRAM AE
– Фейдер*
– Цифровой эффект*

* Вы не можете использовать эти функции только в режиме ночной съемки +медленного затвора.

Скорость затвора в режиме ночной съемки +медленного затвора

Величина скорости затвора	Скорость затвора
+SLOW SHUTTER1	1/12
+SLOW SHUTTER2	1/3

Кнопка +SLOW SHUTTER не работает:

– если установлена или используется функция фейдера
– если используется функция цифрового эффекта
– если переключатель NIGHTSHOT установлен в положение OFF

Подсветка для ночной съемки

Лучи подсветки для ночной съемки являются инфракрасными и поэтому невидимыми. Максимальное расстояние для съемки при использовании подсветки для ночной съемки равно примерно 3 м. В режиме ночной суперсъемки +медленного затвора расстояние для съемки будет в два или более раз больше.

Recording a picture

Superimposing the date and time on pictures

You can record the date or time displayed in the viewfinder superimposed on the picture.
Carry out the following operations in the standby or recording mode.

Press DATE to record the date.
Press TIME to record the time.
Press DATE (or TIME), then press TIME (or DATE) to record the date and time.

Press DATE and/or TIME again. The date and/or time indicator disappears.

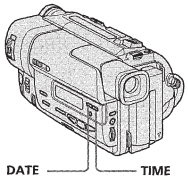

The clock is set at the factory to London time for United Kingdom to Paris time for the other European countries. You can reset the clock in the MENU settings (p. 64).

Note
The date and time indicators recorded manually cannot be deleted.

If you do not record the date and time in the picture
Record the date and time in the black screen as the background for about 10 seconds, then erase the date and time indicators before starting actual recording.

Запись изображения

Наложение даты и времени на изображения

Вы можете записывать дату или время, отображаемые в видоискателе, которые будут наложены на изображение.
Выполните следующие операции в режиме ожидания или записи.

Нажмите кнопку DATE для записи даты.
Нажмите кнопку TIME для записи времени.
Нажмите кнопку DATE (или TIME), затем нажмите кнопку TIME (или DATE) для записи даты и времени.

Нажмите кнопку DATE и/или TIME еще раз. Индикатор даты и/или времени исчезнет.

Часы установлены на предприятии-изготовителе на время Лондона для моделей Соединенного Королевства и на время Парижа для моделей других стран. Вы можете переустановить часы в установках MENU (стр. 64).

Примечание
Индикаторы даты и времени, записанные вручную, не могут быть удалены.

Если Вы не записываете дату и время на изображении
Запишите дату и время на фоне черного экрана в течение 10 секунд, затем сотрите индикаторы даты и времени перед тем, как начать действительную запись.

Checking the recording
– EDITSEARCH / Rec Review

You can use these buttons to check the recorded picture or shoot so that the transition between the last recorded scene and the next scene you record is smooth.

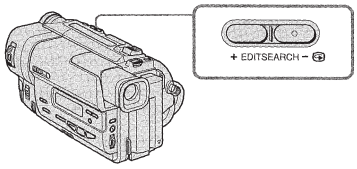

EDITSEARCH

You can search for the next recording start point.

Hold down the +/– (⏷) side of EDITSEARCH in the standby mode. The recorded section is played back.
+ : to go forward
– : to go back
Release EDITSEARCH to stop playback. If you press START/STOP, re-recording begins from the point you released EDITSEARCH. You cannot monitor the sound.

Rec Review

You can check the last recorded section.

Press the – (⏷) side of EDITSEARCH momentarily in the standby mode.
The last few seconds of the recorded section are played back. You can monitor the sound from headphones.

Проверка записи
– EDITSEARCH / Просмотр записи

Вы можете использовать эти кнопки для проверки записанного изображения или съемки, так чтобы переход между последним записанным эпизодом и следующим записываемым эпизодом был плавным.

EDITSEARCH

Вы можете выполнять поиск места начала следующей записи.

Держите нажатой сторону +/– (⏷) кнопки EDITSEARCH в режиме ожидания. Будет воспроизведена записанная часть.
+ : для продвижения вперед
– : для продвижения назад
Отпустите кнопку EDITSEARCH для остановки воспроизведения. Если Вы нажмете кнопку START/STOP, начнется перезапись с того места, где Вы отпустили кнопку EDITSEARCH. Вы не можете контролировать звук.

Просмотр записи

Вы можете проверить последнюю записанную часть.

Нажмите кратковременно сторону – (⏷) кнопки EDITSEARCH в режиме ожидания. Будут воспроизведены последние несколько секунд записанной части. Вы можете контролировать звук через акустическую систему или головные телефоны.

Connections for playback

Connect your camcorder to your TV or VCR with the A/V connecting cable supplied with your camcorder to watch the playback picture on the TV screen. When monitoring the playback picture on the TV screen, we recommend that you power your camcorder from the mains using the AC power adaptor (p. 17). Refer to the operating instructions of your TV or VCR.

Open the jack cover. Connect your camcorder to the TV using the A/V connecting cable. Then, set the TV/VCR selector on the TV to VCR.

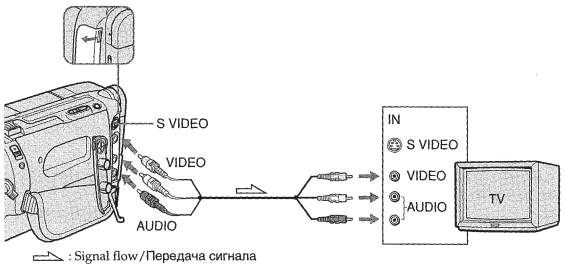

: Signal flow/Передача сигнала

Подсоединения для воспроизведения

Подсоедините Вашу видеокамеру к Вашему телевизору или КВМ с помощью соединительного кабеля аудио/видео, который прилагается к Вашей видеокамере для просмотра воспроизводимого изображения на экране телевизора. При управлении воспроизводимым изображением на экране телевизора рекомендуется подключить питание к Вашей видеокамере от сетевой розетки с помощью сетевого адаптера переменного тока (стр. 17). См. инструкцию по эксплуатации Вашего телевизора или КВМ.

Откройте крышку гнезд. Подсоедините Вашу видеокамеру к телевизору с помощью соединительного кабеля аудио/видео. Затем, установите переключатель TV/VCR на Вашем телевизоре в положение VCR.

Connections for playback

If your TV is already connected to a VCR

Connect your camcorder to the LINE IN input on the VCR by using the A/V connecting cable supplied with your camcorder. Set the input selector on the VCR to LINE.

If your TV or VCR is a monaural type

Connect the yellow plug for video and the white plug for audio on both your camcorder and the TV or the VCR (you do not need to connect the red plug).
With this connection, the sound is monaural even on stereo models.

If your TV/VCR has a 21-pin connector (EUROCONNECTOR)

Use the 21-pin adaptor supplied with your camcorder.

To connect to a TV or VCR without Video/Audio input jacks

Use a PAL system RFU adaptor (not supplied). Refer to the operating instructions of your TV or VCR and the RFU adaptor. With an RFU adaptor, the sound is monaural.

If your TV or VCR has an S video jack
Connect using an S video cable (not supplied) to obtain high-quality pictures. With this connection, you do not need to connect the yellow (video) plug of the A/V connecting cable. Connect the S video cable (not supplied) to the S video jacks on both your camcorder and the TV or the VCR.

Подсоединения для воспроизведения

Если Ваш телевизор уже подсоединен к КВМ

Подсоедините Вашу видеокамеру к входному гнезду LINE IN на КВМ с помощью соединительного кабеля аудио/видео, который прилагается к Вашей видеокамере. Установите селектор входного сигнала на КВМ в положение LINE.

Если Ваш телевизор или КВМ монофонического типа

Подсоедините желтый штекер для видеосигнала и белый штекер для аудиосигнала к Вашей видеокамере и телевизору или КВМ (Вам не нужно подсоединять красный штекер).
При данном соединении звук будет монофоническим даже на стереофонических моделях.

Если в Вашем телевизоре/КВМ имеется 21-штырьковый разъем (EUROCONNECTOR)

Воспользуйтесь 21-штырьковым адаптером, прилагаемым к Вашей видеокамере.

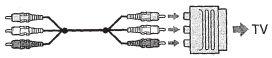

Для подсоединения к Вашему телевизору или КВМ без входных гнезд аудио/видео

Используйте ВЧ-адаптер системы PAL (не прилагается).
Обратитесь к инструкции по эксплуатации Вашего телевизора или КВМ и ВЧ-адаптера. При использовании ВЧ-адаптера звук будет монофоническим.

Если в Вашем телевизоре или КВМ имеется гнездо S видео.
Выполните соединение с помощью кабеля S видео (не прилагается) для получения высококачественного изображения. При данном соединении Вам не нужно подсоединять желтый штекер (видео) соединительного кабеля аудио/видео. Подсоедините кабель S видео (не прилагается) к гнездам S видео на Вашей видеокамере и Вашем телевизоре или КВМ.

Connections for playback

Using the AV cordless IR receiver

Once you connect the AV cordless IR receiver (not supplied) to your TV or VCR, you can easily view the picture on your TV. For details, refer to the operating instructions of the AV cordless IR receiver.

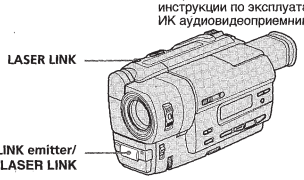

(1) After connecting your TV and AV cordless IR receiver, set the POWER switch on the AV cordless IR receiver to ON.
(2) Turn the TV on and set the TV/VCR selector on the TV to VCR.
(3) Press LASER LINK. The lamp of LASER LINK lights up.
(4) Press ► on your camcorder to start playback.
(5) Point the LASER LINK emitter at the AV cordless IR receiver. Adjust the position of your camcorder and the AV cordless IR receiver to obtain clear playback pictures.

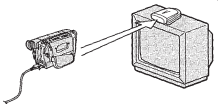

To cancel the laser link function

Press LASER LINK. The lamp on the LASER LINK button goes out.

If you turn the power off
Laser link turns off automatically.

Note
When laser link is activated (the LASER LINK button is lit), your camcorder consumes power. Press LASER LINK to turn off the laser link function when it is not needed.

Подсоединения для воспроизведения

Использование беспроводного ИК аудиовидеоприемника

После подсоединения беспроводного ИК аудиовидеоприемника к Вашему телевизору (не прилагается) Вы можете легко наблюдать изображение на экране Вашего телевизора. Подробные сведения содержатся в инструкции по эксплуатации беспроводного ИК аудиовидеоприемника.

(1) После подсоединения к Вашему телевизору беспроводного ИК аудиовидеоприемника установите переключатель POWER на беспроводном ИК аудиовидеоприемнике в положение ON.
(2) Включите телевизор и установите селектор TV/VCR на телевизоре в положение VCR.
(3) Нажмите кнопку LASER LINK. Высветится лампочка LASER LINK.
(4) Нажмите кнопку ► на Вашей видеокамере для начала включения воспроизведения.
(5) Направьте излучатель LASER LINK на беспроводный ИК аудиовидеоприемник. Отрегулируйте положение Вашей видеокамеры и беспроводного ИК аудиовидеоприемника для получения четкого воспроизводимого изображения.

Для отмены функции LASER LINK

Нажмите кнопку LASER LINK. Лампочка на кнопке LASER LINK погаснет.

Если Вы выключите питание
Канал передачи лазерных сигналов выключится автоматически.

Примечание
При включенном лазерном канале передачи сигналов (при этом высвечивается кнопка LASER LINK) Ваша видеокамера потребляет питание. Нажмите кнопку LASER LINK для выключения функции LASER LINK, если она не требуется.

Playing back a tape

You can monitor the playback picture on a TV screen after connecting your camcorder to a TV or VCR. You can also monitor the picture in the viewfinder.
You can control playback using the Remote Commander supplied with your camcorder.
(1) Install the power source and insert the recorded tape.
(2) Set the POWER switch to PLAYER while pressing the small green button. The video control buttons light up.
(3) Press ◄◄ to rewind the tape.
(4) Press ► to start playback.

Воспроизведение ленты

Вы можете контролировать воспроизводимое изображение на экране телевизора после подсоединения Вашей видеокамеры к телевизору или КВМ. Вы можете также контролировать изображение в видоискателе.
Вы можете контролировать воспроизведение с помощью пульта дистанционного управления, прилагаемого к Вашей видеокамере.
(1) Установите источник питания и вставьте записанную ленту.
(2) Нажав маленькую зеленую кнопку, установите переключатель POWER в положение PLAYER. Высветятся кнопки видеоконтроля.
(3) Нажмите кнопку ◄◄ для ускоренной перемотки ленты назад.
(4) Нажмите кнопку ► для включения воспроизведения.

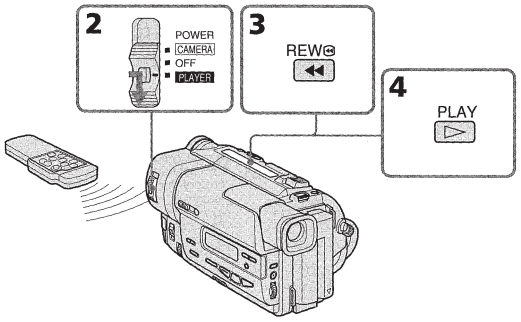

To stop playback

Press ■.

To monitor the sound from headphones
Connect headphones (not supplied) to the ∩ jack.

Для остановки воспроизведения

Нажмите кнопку ■.

Для контроля звука через головные телефоны
Подсоедините головные телефоны (не прилагаются) к гнезду ∩.

Playing back a tape

To display the viewfinder indicators on the TV – Display function

Press DISPLAY on the Remote Commander supplied with your camcorder.
The indicators appear on the TV screen.
To make the indicators disappear, press DISPLAY again.

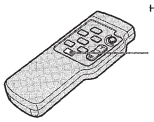

Various playback modes

To operate control buttons, set the POWER switch to PLAYER.

To view a still picture (playback pause)
Press II during playback. To resume playback, press II or ►.

To advance the tape
Press ►► in the stop mode. To resume normal playback, press ►.

To rewind the tape
Press ◄◄ in the stop mode. To resume normal playback, press ►.

To locate a scene monitoring the picture (picture search)
Keep pressing ◄◄ or ►► during playback. To resume normal playback, release the button.

Воспроизведение ленты

Для отображения индикаторов видоискателя на эране телевизора – Функция индикации

Нажмите кнопку DISPLAY на пульте дистанционного управления, который прилагается к Вашей видеокамере.
На экране телевизора появятся индикаторы.
Для того, чтобы индикаторы исчезли, нажмите еще раз кнопку DISPLAY.

Переменные режимы воспроизведения

Для выполнения управления кнопками установите переключатель POWER в положение PLAYER.

Для просмотра неподвижного изображения (пауза воспроизведения)
Нажмите во время воспроизведения кнопку II. Для возобновления обычного воспроизведения нажмите кнопку II или кнопку ►.

Для ускоренной перемотки ленты вперед
Нажмите в режиме остановки кнопку ►►. Для возобновления обычного воспроизведения нажмите кнопку ►.

Для ускоренной перемотки ленты назад
Нажмите в режиме остановки кнопку ◄◄. Для возобновления обычного воспроизведения нажмите кнопку ►.

Для отыскания эпизода во время контроля изображения (поиск изображения)
Держите нажатой кнопку ◄◄ или ►► во время воспроизведения. Для восстановления обычного воспроизведения отпустите кнопку.

Playing back a tape

To monitor the high-speed picture while advancing or rewinding the tape (skip scan)
Keep pressing ◄◄ while rewinding or ►► while advancing the tape. To resume rewinding or advancing, release the button.

To view the picture at 1/5 speed (slow playback)
Press I► on the Remote Commander during playback. To resume normal playback, press ►.

In the various playback modes
Sound is muted.

When the playback pause mode lasts for 5 minutes
Your camcorder automatically enters the stop mode. To resume playback, press ►.

If slow playback lasts for about 1 minute
Your camcorder automatically returns to normal speed.

When you play back a tape recorded in the LP mode
Noise may appear during playback pause mode, slow playback or picture search.

Воспроизведение ленты

Для контроля изображения на высокой скорости во время ускоренной перемотки ленты вперед или назад (поиск методом прогона)
Держите нажатой кнопку ◄◄ во время ускоренной перемотки ленты назад или кнопку ►► во время ускоренной перемотки ленты вперед. Для возобновления обычной перемотки ленты вперед или назад отпустите кнопку.

Для просмотра воспроизведения изображения на1/5 скорости (замедленное воспроизведение)
Нажмите во время воспроизведения кнопку I► на пульте дистанционного управления. Для возобновления обычного воспроизведения нажмите кнопку ►.

В переменных режимах воспроизведения
Звук будет приглушен.

Если режим паузы воспроизведения продлится 5 минут
Ваша видеокамера автоматически войдет в режим остановки. Для возобновления воспроизведения нажмите кнопку ►.

Если замедленное воспроизведение продлится около 1 минуты
Ваша видеокамера автоматически переключится на нормальную скорость.

При воспроизведении ленты, записанной в системе в режиме LP
В режиме паузы воспроизведения, замедленного воспроизведения или поиска изображения могут появиться помехи.

Photo recording

You can record a still picture like a photograph. This mode is useful when you want to record a picture such as a photograph or when you print a picture using a video printer (not supplied).

NORMAL PHOTO/ ОБЫЧНОЕ ФОТО

This mode records a still picture for about seven seconds./
В этом режиме неподвижное изображение записывается около семи секунд.

FADE PHOTO/ ФОТО С ВВЕДЕНИЕМ/ ВЫВЕДЕНИЕМ ИЗОБРАЖЕНИЯ

SHUTTER PHOTO/ ФОТО С ЗАТВОРОМ

(1) While your camcorder is in the standby mode, select the photo mode in the MENU settings (p. 64).
(2) Keep pressing PHOTO lightly until a still picture appears. CAPTURE appears.
Recording does not start yet.
To change the still picture, release PHOTO, select a still picture again, and then press and hold PHOTO lightly.
(3) Press PHOTO deeper.
The still picture in the viewfinder is recorded for about seven seconds. The sound during those seven seconds is also recorded.
During recording, the image you are shooting appears in the viewfinder.

Фотосъемка

Вы можете записывать неподвижное изображение подобно фотографии. Данный режим полезен, если Вы хотите записывать изображение в виде фотоснимка или же при выполнении отпечатков с помощью видеопринтера (не прилагается).

(1) В то время, когда Ваша видеокамера находится в режиме ожидания, выберите фоторежим в установках MENU (стр. 64).
(2) Держите слегка нажатой кнопку PHOTO до тех пор, пока не появится неподвижное изображение. Появится индикация CAPTURE.
Запись пока еще не началась.
Для изменения неподвижного изображения отпустите кнопку PHOTO, выберите неподвижное изображение снова, а затем нажмите и держите слегка нажатой кнопку PHOTO.
(3) Нажмите кнопку PHOTO сильнее.
Неподвижное изображение в видоискателе будет записываться около семи секунд. В течение этих семи секунд будет записываться и звук.
Во время записи, изображение, которое Вы снимаете, появится в видоискателе.

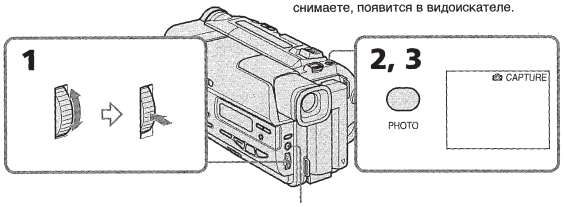

Photo recording

Notes
- During photo recording, you cannot change the mode or setting of the following functions:
  – Digital effect
  – Fader
  – PROGRAM AE
  – Picture effect
  – Exposure
  – Wide mode
  – Backlight
  – NightShot +Slow shutter
- The PHOTO button does not work:
  – while the digital effect function is set or in use.
  – while the fader function is in use.
- When recording a still picture, do not shake your camcorder. The picture may fluctuate.

To record a still picture during normal recording
Press PHOTO deeper. The still picture is then recorded for about seven seconds and your camcorder returns to the standby mode. You cannot select another still picture.

Фотосъемка

Примечания
- Во время фотосъемки Вы не можете изменять режим или установку следующих функций:
  – Цифровой эффект
  – Фейдер
  – PROGRAM AE
  – Эффект изображения
  – Экспозиция
  – Широкоэкранный режим
  – Задняя подсветка
  – Ночная суперсъемка +медленный затвор
- Кнопка PHOTO не работает:
  – если установлена или используется функция цифрового эффекта.
  – если используется функция фейдера.
- При записи неподвижного изображения не трясите Вашу видеокамеру. Изображение может быть неустойчивым.

Для записи неподвижного изображения во время обычной съемки
Нажмите посильнее кнопку PHOTO. Неподвижное изображение будет записываться около семи секунд, а затем видеокамера вернется в режим ожидания. Вы не сможете при этом выбрать другое неподвижное изображение.

Using the wide mode

You can record a cinema-like picture (CINEMA) or a 16:9 wide picture to watch on the 16:9 wide-screen TV (16:9 FULL). Refer to the operating instructions of your TV.

CINEMA
Black bands appear on the screen during recording in the CINEMA mode **[a]**, playing back on a normal TV **[b]** or a wide-screen TV **[c]**. If you set the screen mode of the wide-screen TV to the zoom mode, a picture without black bands appears **[d]**.

16:9 FULL
The picture during recording in the 16:9 FULL mode **[e]**, or playing back on a normal TV **[f]** or a wide-screen TV **[g]** is horizontally compressed. If you set the screen mode of the wide-screen TV to the full mode, you can watch pictures of normal images **[h]**.

Использование широкоэкранного режима

Вы можете записывать изображение наподобие кино (CINEMA) или широкоэкранное изображение 16:9 для просмотра на широкоэкранном телевизоре 16:9 (16:9 FULL). Обратитесь к инструкции по эксплуатации Вашего телевизора.

CINEMA
Черные полосы появятся на экране во время записи в режиме CINEMA **[a]**, воспроизведения на обычном телевизоре **[b]** или на широкоэкранном телевизоре **[c]**. Если Вы установите экранный режим на широкоэкранном телевизоре в режим масштабирования, то изображение появится без черных полос **[d]**.

16:9 FULL
Изображение во время записи в режиме 16:9 FULL **[e]**, либо во время воспроизведения на обычном телевизоре **[f]** или широкоэкранном телевизоре **[g]** будет сжато по горизонтали. Если Вы установите экранный режим широкоэкранного телевизора в полноэкранный режим, Вы можете просматривать изображения обычных съемок **[h]**.

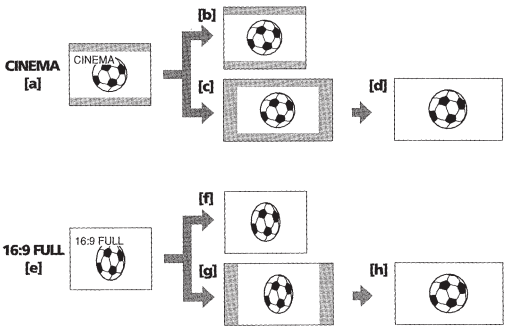

Using the wide mode

In the standby mode, set 16:9WIDE to CINEMA or 16:9FULL in the MENU settings (p. 64).

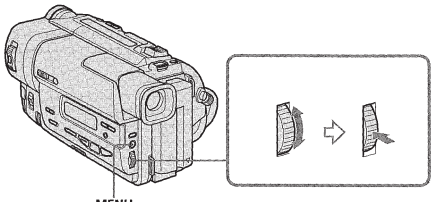

To cancel the wide mode
Set 16:9WIDE to OFF in the MENU settings.

If the wide mode is set to 16:9FULL
The SteadyShot function does not work. If you select 16:9FULL in the MENU settings when the SteadyShot function is working, ☞ flashes and the SteadyShot function does not function.

In the wide mode
You cannot select the old movie function with DIGITAL EFFECT and the bounce function with FADER.

Date or time indicator
When you record in the 16:9FULL mode, the date or time indicator will be widened on wide-screen TVs.

During recording
You cannot change or cancel the wide mode.

Использование широкоэкранного режима

В режиме ожидания установите команду 16:9WIDE в положение CINEMA или16:9FULL в установках MENU (стр. 64).

Для отмены широкоэкранного режима
Установите команду 16:9WIDE в положение OFF в установках MENU.

Если широкоэкранный режим установлен в положение 16:9FULL
Функция устойчивой съемки не работает. Если Вы выберете команду 16:9FULL в установках MENU в то время, когда работает функция устойчивой съемки, начнет мигать индикация ☞, и функция устойчивой съемки работать не будет.

В широкоэкранном режиме
Вы не можете выбрать функцию старинного кино с помощью DIGITAL EFFECT и функцию перескакивания с помощью FADER.

Индикатор даты или времени
Если Вы выполняете запись в режиме 16:9FULL, индикатор даты или времени расширится на широкоэкранном телевизоре.

Во время записи
Вы не можете изменить или отменить широкоэкранный режим.

Using the fader function

You can fade in or out to give your recording a professional appearance.

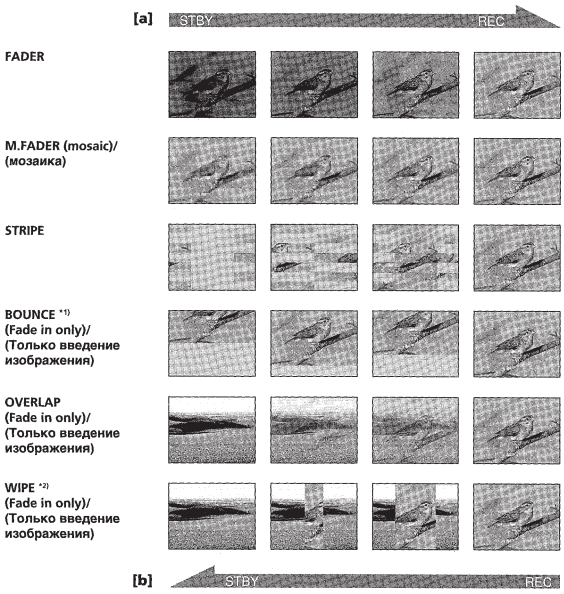

MONOTONE
When fading in, the picture gradually changes from black-and-white to colour.
When fading out the picture gradually changes from colour to black-and-white.

*1) You cannot use this function when D ZOOM is set to ON in the MENU settings.
*2) The sound does not wipe away.

Использование функции фейдера

Вы можете выполнять плавное введение и выведение изображения, чтобы придать Вашей съемке профессиональный вид.

MONOTONE
При введении изображение будет постепенно изменяться от черно-белого до цветного.
При выведении изображение будет постепенно изменяться от цветного до черно-белого.

*1) Вы не можете использовать эту функцию, если команда D ZOOM установлена в положение ON в установках MENU.
*2) Звук при этом не убирается.

Using the fader function

(1) When fading in [a]
In the standby mode, press FADER until the desired fader indicator flashes.
When fading out [b]
In the recording mode, press FADER until the desired fader indicator flashes.
The indicator changes as follows:
FADER → M.FADER → STRIPE → BOUNCE → MONOTONE → OVERLAP → WIPE → no indicator
The last selected fader mode is indicated first of all.
(2) Press START/STOP. The fader indicator stops flashing.

Использование функции фейдера

(1) При введении изображение [a]
В режиме ожидания, нажимайте кнопку FADER до тех пор, пока не начнет мигать нужный индикатор фейдера.
При выведении изображения [b]
В режиме записи, нажимайте кнопку FADER до тех пор, пока не начнет мигать нужный индикатор фейдера.
Индикатор будет изменяться следующим образом:
FADER → M.FADER → STRIPE → BOUNCE → MONOTONE → OVERLAP → WIPE → без индикатора
Последний из выбранных режимов фейдера отображается первым.
(2) Нажмите кнопку START/STOP. Индикатор фейдера перестанет мигать.

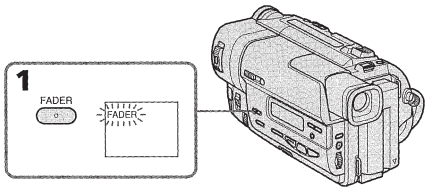

To cancel the fader function
After the fade in/out is carried out : Your camcorder automatically returns to the normal mode.
Before the fade in/out is carried out : Before pressing START/STOP, press FADER until the indicator disappears.

Для отмены функции фейдера
После того, как выполнено введение/выведение изображения: Ваша видеокамера автоматически вернется В обычный режим.
Перед тем, как выполнить введение/выведения изображения: Перед тем, как нажать кнопку START/STOP, нажимайте кнопку FADER до тех пор, пока не исчезнет индикатор.

Using the fader function

Note
You cannot use the following functions while using the fader function. Also, you cannot use the fader function while using the following functions.
– Digital effect
– Low lux mode of PROGRAM AE (Overlap/ Wipe function only)
– NightShot +Slow shutter

The date, time indicator and title do not fade in or fade out
Erase them before operating the fader function if they are not needed.

If you do not record anything before operating the wipe or overlap function
Your camcorder stores the image on the tape. As the image is being stored, the WIPE or OVERLAP indicator flashes quickly, and the picture you are shooting disappears from the viewfinder. Depending on the tape condition, the picture may not be recorded clearly.

When START/STOP MODE is set to ⏚ or 5SEC
You cannot use the fader function.

While using the bounce function, you cannot use the following functions:
– Exposure
– Focus
– Zoom

Note on the bounce function
The BOUNCE indicator does not appear in the following mode or functions:
– D ZOOM is set to ON in the MENU settings
– Wide mode
– Picture effect
– PROGRAM AE

Использование функции фейдера

Примечание
Вы не можете использовать следующие функции во время использования функции фейдера. Также, Вы не можете использовать функцию фейдера во время использования следующих функций.
– Цифровой эффект
– Режим низкой освещенности PROGRAM AE (только функция наложения/вытеснения изображения шторкой)
– Ночная суперсъемка +медленный затвор

Индикатор даты, времени и титр не вводятся и не выводятся вместе с изображением
Удалите их перед тем, как включить функцию фейдера, если они не нужны.

Если Вы не записывали ничего перед включением функции вытеснения шторкой или наложения изображения
Ваша видеокамера хранит изображение на ленте. Во время сохранения изображения индикатор WIPE или OVERLAP будет быстро мигать, а изображение, которое Вы снимаете, исчезнет в видоискателе. В зависимости от состояния ленты, изображение может быть записано нечетко.

Если команда START/STOP MODE установлена в положение ⏚ или 5SEC
Вы не можете использовать функцию фейдера.

Во время использования функции перескакивания Вы не можете использовать следующие функции:
– Экспозиция
– Фокусировка
– Трансфокация

Примечание по функции перескакивания
Индикатор BOUNCE не появляется в следующих режимах или при использовании следующих функций:
– команда D ZOOM установлена в положение ON в установках MENU
– Широкоэкранный режим
– Эффект изображения
– PROGRAM AE

Using special effects – Picture effect

You can digitally process images to obtain special effects like those in films or on the TV.

PASTEL [a] : The contrast of the picture is emphasized, and the picture looks like an animated cartoon.
NEG. ART [b] : The colour and brightness of the picture is reversed.
SEPIA : The picture is sepia.
B&W : The picture is monochrome (black-and-white).
SOLARIZE [c] : The light intensity is clearer, and the picture looks like an illustration.
MOSAIC [d] : The picture is mosaic.
SLIM [e] : The picture expands vertically.
STRETCH [f] : The picture expands horizontally.

Использование специальных эффектов – Эффект изображения

Вы можете выполнять обработку изображения цифровым методом для получения специальных эффектов, как в кинофильмах или на экранах телевизоров.

PASTEL [a] : Подчеркивается контрастность изображения, которому придается мультипликационный вид.
NEG. ART [b] : Цвет и яркость изображения будут негативными.
SEPIA : Изображение будет в цвете сепии.
B&W : Изображение будет монохроматическим (черно-белым).
SOLARIZE [c] : Яркость света будет усиленной, а изображение будет выглядеть как иллюстрация.
MOSAIC [d] : Изображение будет мозаическим.
SLIM [e] : Изображение растянется по вертикали.
STRETCH [f] : Изображение растянется по горизонтали.

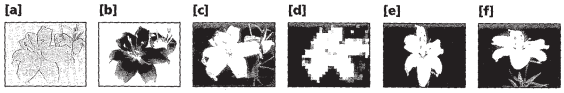

Using special effects – Picture Effect

(1) Press PICTURE EFFECT in the standby or recording mode.
The picture effect indicator appears.
(2) Turn the SEL/PUSH EXEC dial to select the desired picture effect mode.
The indicator changes as follows:
PASTEL ↔ NEG.ART ↔ SEPIA ↔ B&W ↔ SOLARIZE ↔ MOSAIC ↔ SLIM ↔ STRETCH

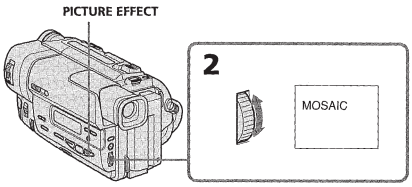

To turn the picture effect function off

Press PICTURE EFFECT.

While using the picture effect function
You cannot select the old movie mode with DIGITAL EFFECT.

When you turn the power off
Your camcorder automatically returns to the normal mode.

Использование специальных эффектов – Эффект изображения

(1) Нажмите кнопку PICTURE EFFECT в режиме ожидания или режиме записи.
Появится индикатор эффекта изображения.
(2) Поверните диск SEL/PUSH EXEC для выбора режима нужного эффекта изображения.
Индикатор будет изменяться следующим образом:
PASTEL ↔ NEG.ART ↔ SEPIA ↔ B&W ↔ SOLARIZE ↔ MOSAIC ↔ SLIM ↔ STRETCH

Для выключения функции эффекта изображения

Нажмите кнопку PICTURE EFFECT.

При использовании функции эффекта изображения
Вы не можете выбрать режим старинного кино с помощью функции цифрового эффекта DIGITAL EFFECT.

Если Вы выключите питание
Ваша видеокамера автоматически вернется в обычный режим.

Using special effects – Digital effect

You can add special effects to recorded pictures using the various digital functions. The sound is recorded normally.

STILL
You can record a still picture so that it is superimposed on a moving picture.

FLASH (FLASH MOTION)
You can record still pictures successively at constant intervals.

LUMI. (LUMINANCEKEY)
You can swap a brighter area in a still picture with a moving picture.

TRAIL
You can record the picture so that an incidental image like a trail is left.

SLOW SHTR (SLOW SHUTTER)
You can slow down the shutter speed. The slow shutter mode is good for recording dark pictures more brightly. However, the picture may be less clear.

OLD MOVIE
You can add an old movie type atmosphere to pictures. Your camcorder automatically sets the wide mode to CINEMA, picture effect to SEPIA, and the appropriate shutter speed.

Использование специальных эффектов – Цифровой эффект

Вы можете добавлять специальные эффекты к записываемому изображению с помощью разных цифровых функций. Записываемый звук будет обычным.

STILL
Вы можете записывать неподвижное изображение, которое можно налагать на подвижное изображение.

FLASH (FLASH MOTION)
Вы можете записывать неподвижные изображения в последовательности через определенные интервалы.

LUMI. (LUMINANCEKEY)
Вы можете изменять яркие места на неподвижном изображении на подвижные изображения.

TRAIL
Вы можете записывать изображение с эффектом запаздывания.

SLOW SHTR (SLOW SHUTTER)
Вы можете замедлить скорость затвора. Режим медленного затвора является подходящим для записи темных изображений в более ярком свете. Однако, изображение может получиться менее четким.

OLD MOVIE
Вы можете привносить атмосферу старинного кино в изображения. Ваша видеокамера будет автоматически устанавливать широкоэкранный режим в положение CINEMA, эффект изображения в положение SEPIA, и выставлять соответствующую скорость затвора.

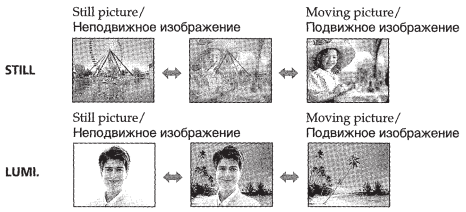

Using special effects – Digital effect

(1) While your camcorder is in the standby or recording mode, press DIGITAL EFFECT. The digital effect indicator appears.
(2) Turn the SEL/PUSH EXEC dial to select the desired digital effect mode.
The indicator changes as follows:
STILL ↔ FLASH ↔ LUMI. ↔ TRAIL ↔ SLOW SHTR ↔ OLD MOVIE
(3) Press the SEL/PUSH EXEC dial. The indicator lights up and the bars appear. In the STILL and LUMI. modes, the still picture is stored in memory.
(4) Turn the SEL/PUSH EXEC dial to adjust the effect.

Items to adjust

STILL	The rate of the still picture you want to superimpose on the moving picture
FLASH	The interval of flash motion
LUMI.	The colour scheme of the area in the still picture which is to be swapped with a moving picture
TRAIL	The vanishing time of the incidental image
SLOW SHTR	Shutter speed. The larger the shutter speed number, the slower the shutter speed.
OLD MOVIE	No adjustment necessary

The more bars there are on screen, the stronger the digital effect. The bars appear in the following modes: STILL, FLASH, LUMI. and TRAIL.

Использование специальных эффектов – Цифровой эффект

(1) В то время, когда Ваша видеокамера находится в режиме ожидания или режиме записи, нажмите кнопку DIGITAL EFFECT.
Появится индикатор цифрового эффекта.
(2) Поверните диск SEL/PUSH EXEC для выбора режима нужного цифрового эффекта.
Индикатор будет изменяться следующим образом:
STILL ↔ FLASH ↔ LUMI. ↔ TRAIL ↔ SLOW SHTR ↔ OLD MOVIE
(3) Нажмите диск SEL/PUSH EXEC.
Высветится индикатор и появятся полосы. В режимах STILL и LUMI. неподвижное изображение будет сохранено в памяти.
(4) Поверните диск SEL/PUSH EXEC для настройки эффектов.

Пункты для регулировки

STILL	Интенсивность неподвижного изображения, которое Вы хотите наложить на подвижное изображение
FLASH	Интервал прерывистого движения
LUMI.	Цветовая гамма участка на неподвижном изображении, который будет заменен на подвижное изображение
TRAIL	Время исчезания побочного изображения
SLOW SHTR	Скорость затвора. Чем больше величина скорости затвора, тем медленнее скорость затвора
OLD MOVIE	Не требуется никаких регулировок

Чем больше прямоугольников на экране, тем сильнее цифровой эффект. Прямоугольники появляются в следующих режимах: STILL, FLASH, LUMI. и TRAIL.

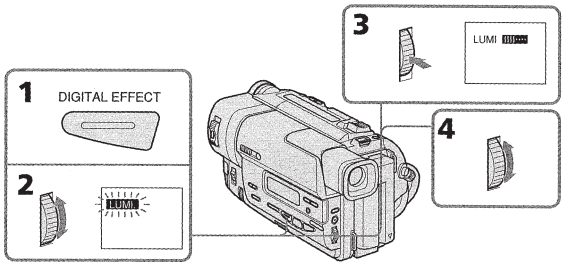

Using special effects – Digital effect

To cancel the digital effect

Press DIGITAL EFFECT. The digital effect indicator disappears.

Notes
- The following functions do not work during digital effect:
  – Fader
  – Low Lux mode of PROGRAM AE
  – Photo recording
  – NightShot +Slow shutter
- The following function does not work in the slow shutter mode:
  – Exposure
- The following functions do not work in the old movie mode.
  – Exposure
  – Wide mode
  – Picture effect

When you turn the power off
The digital effect will be automatically canceled.

When recording in the slow shutter mode
Auto focus may not be effective. Focus manually using a tripod.

Shutter speed

Shutter speed number	Shutter speed
SLOW SHTR 1	1/25
SLOW SHTR 2	1/12
SLOW SHTR 3	1/6
SLOW SHTR 4	1/3

Использование специальных эффектов – Цифровой эффект

Для отмены цифрового эффекта

Нажмите кнопку DIGITAL EFFECT. Индикатор цифрового эффекта исчезнет.

Примечания
- Следующие функции не работают при использовании цифрового эффекта:
  – Фейдер
  – Режим низкой освещенности PROGRAM AE
  – Фотосъемка
  – Ночная суперсъемка +медленный затвор
- Следующая функция не работает в режиме медленного затвора:
  – Экспозиция
- Следующая функция не работает в режиме старинного кино.
  – Экспозиция
  – Широкоэкранный режим
  – Эффект изображения

При выключении питания
Цифровой эффект будет автоматически отменен.

При записи в режиме медленного затвора
Автоматическая фокусировка может быть не эффективной. Выполните фокусировку вручную, используя треногу.

Скорость затвора

Величина скорости затвора	Скорость затвора
SLOW SHTR 1	1/25
SLOW SHTR 2	1/12
SLOW SHTR 3	1/6
SLOW SHTR 4	1/3

Using the PROGRAM AE function

You can select PROGRAM AE (Auto Exposure) mode to suit your specific shooting requirements.

Spotlight mode
This mode prevents people's faces, for example, from appearing excessively white when shooting subjects lit by strong light at weddings or in the theatre.

Soft portrait mode
This mode brings out the subject while creating a soft background for subjects such as people or flowers, and faithfully reproduces skin colour.

Sports lesson mode
This mode minimizes shake on fast-moving subjects such as in tennis or golf.

Beach & ski mode
This mode prevents peoples' faces from appearing dark in strong light or reflected light, such as at a beach in midsummer or on a ski slope.

Sunset & moon mode
This mode allows you to maintain atmosphere when you are recording sunsets, general night views, fireworks displays and neon signs.

Landscape mode
This mode is for when you are recording distant subjects such as mountains and prevents your camcorder from focusing on glass or metal mesh in windows when you are recording a subject behind glass or a screen.

Low lux mode
This mode makes subjects brighter in insufficient light.

Использование функции PROGRAM AE

Вы можете выбрать режим PROGRAM AE (автоматическая съемка) в соответствии со специфическими требованиями к съемке.

Режим прожекторного освещения
Данный режим предотвращает, к примеру, лица людей от появления в чрезмерно белом свете при выполнении съемки людей, освещенных сильным светом на свадебных церемониях или в театре.

Мягкий портретный режим
Этот режим позволяет выделить объект на фоне мягкого фона, и подходит для съемки, например, людей или цветов, обеспечивая точное воспроизведением телесного цвета.

Режим спортивных состязаний
Этот режим позволяет минимизировать дрожание при при съемке быстро движущихся предметов, например, при игре в теннис или гольф.

Пляжный и лыжный режим
Этот режим предотвращает появление темных лиц людей в зоне сильного света или отраженного света, например, на пляже в разгар лета или на снежном склоне.

Режим захода солнца и луны
Этот режим позволяет в точности отражать обстановку при съемке заходов солнца, общих ночных видов, фейерверков и неоновых реклам.

Ландшафтный режим
Этот режим позволяет выполнять съемку отдаленных объектов, таких как горы, например, и предотвращает фокусировку видеокамеры на стекло или металлическую решетку на окнах, когда Вы выполняете запись объектов позади стекла или решетки.

Режим низкой освещенности
Этот режим делает объекты ярче при недостаточном освещении.

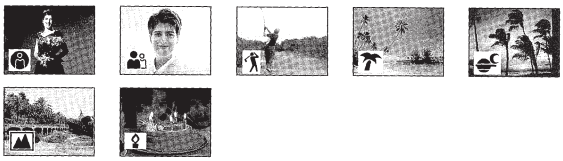

Using the PROGRAM AE function

(1) Press PROGRAM AE in the standby mode.
The PROGRAM AE indicator appears.
(2) Turn the SEL/PUSH EXEC dial to select the desired PROGRAM AE mode.
The indicator changes as follows:

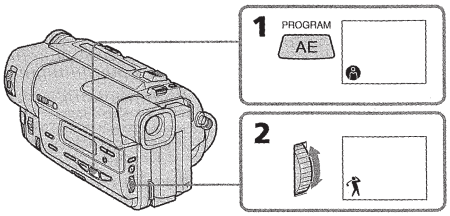

To turn the PROGRAM AE function off
Press PROGRAM AE.

Использование функции PROGRAM AE

(1) Нажмите кнопку PROGRAM AE в режиме ожидания.
Появится индикатор PROGRAM AE.
(2) Поверните диск SEL/PUSH EXEC для выбора нужного режима PROGRAM AE.
Индикатор будет изменяться следующим образом:

Для выключения функции PROGRAM AE
Нажмите кнопку PROGRAM AE.

Using the PROGRAM AE function

Notes
- In the spotlight, sports lesson and beach & ski modes, you cannot take close-ups. This is because your camcorder is set to focus only on subjects in the middle to far distance.
- In the sunset & moon and landscape modes, your camcorder is set to focus only on distant subjects.
- The following functions do not work in the PROGRAM AE mode:
  – Slow shutter
  – Old movie
  – NightShot
  – Bounce
- The following functions do not work in the low lux mode:
  – Digital effect
  – Overlap
  – Wipe
  – Exposure
- If you press PROGRAM AE when using the NightShot function, the PROGRAM AE indicator flashes and the PROGRAM AE function does not work.

If you are recording under a discharge tube such as a fluorescent lamp, sodium lamp or mercury lamp
Flickering or changes in colour may occur in the following modes. If this happens, turn the PROGRAM AE function off.
– Soft portrait mode
– Sports lesson mode

Использование функции PROGRAM AE

Примечания
- В режимах прожекторного освещения, спортивных состязаний, а также в пляжном и лыжном режиме Вы можете выполнять съемку крупным планом. Это объясняется тем, что Ваша видеокамера настроена для фокусировки только на объекты, находящиеся на среднем и дальнем расстояниях.
- В режиме захода солнца и луны, а также в ландшафтном режиме Ваша видеокамера настроена на фокусировку только на дальние объекты.
- Следующие функции не работают в режиме PROGRAM AE:
  – Медленный затвор
  – Старинное кино
  – Ночная съемка
  – Перескакивание
- Следующие функции не работают в режиме низкой освещенности:
  – Цифровой эффект
  – Наложение изображения
  – Вытеснение изображения шторкой
  – Экспозиция
- Если Вы нажмете кнопку PROGRAM AE во время использования функции ночной съемки, начнет мигать индикатор PROGRAM AE, и функция PROGRAM AE не будет работать.

Если Вы выполняете запись при использовании газоразрядной лампы, натриевой лампы или ртутной лампы
В следующих режимах может возникнуть мерцание или неустойчивые процессы. Если это произойдет, выключите функцию PROGRAM AE.
– Мягкий портретный режим
– Режим спортивных состязаний

Adjusting the exposure manually

You can manually adjust and set the exposure. When you turn your camcorder on, it will automatically be in the automatic exposure mode. This mode works to record subjects so that they are recorded slightly brighter than they actually are.
Adjust the exposure manually in the following cases:
- The subject is backlit
- Bright subject and dark background
- To record dark pictures (e.g. night scenes) faithfully

(1) Press EXPOSURE in the standby or recording mode.
The exposure indicator appears.
(2) Turn the SEL/PUSH EXEC dial to adjust the brightness.

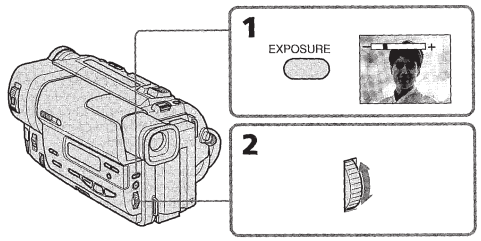

To return to the automatic exposure mode
Press EXPOSURE again.

Note
When you adjust the exposure manually, the following function and modes do not work:
– Backlight
– Slow shutter
– Old movie

If you change the PROGRAM AE mode or slide NIGHTSHOT to ON
Your camcorder automatically returns to the automatic exposure mode.

Регулировка экспозиции вручную

Вы можете отрегулировать и установить экспозицию вручную. Если включите свою видеокамеру, она будет устанавливаться автоматически в режиме автоматической экспозиции. Этот режим функционирует для съемки объектов таким образом, что они записываются слегка ярче, чем они есть на самом деле.
Отрегулируйте экспозицию вручную в следующих случаях:
- Объект на фоне задней подсветки
- Яркий объект на темном фоне
- Для записи темных изображений (например, ночных сцен) с большой достоверностью

(1) Нажмите кнопку EXPOSURE в режиме ожидания или записи.
Появится индикатор экспозиции.
(2) Поверните диск SEL/PUSH EXEC для регулировки яркости.

Для возврата в режим автоматической экспозиции
Нажмите кнопку EXPOSURE еще раз.

Примечание
При выполнении регулировки вручную следующие функции и режимы не работают:
– Задняя подсветка
– Медленный затвор
– Старинное кино

При изменении режима PROGRAM AE или установке переключателя NIGHTSHOT в положение ON
Ваша видеокамера автоматически вернется в режим автоматической экспозиции.

Focusing manually

You can gain better results by manually adjusting the focus in the following cases:
- The autofocus mode is not effective when shooting
  - subjects through glass coated with water droplets
  - horizontal stripes
  - subjects with little contrast with backgrounds such as walls and sky
- When you want to change the focus from a subject in the foreground to a subject in the background
- Shooting a stationary subject when using a tripod

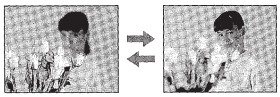

(1) Set FOCUS to MANUAL in the standby or recording mode. The ☞ indicator appears.
(2) Turn NEAR/FAR to sharpen focus.

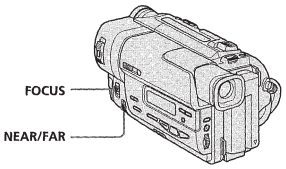

To return to the autofocus mode
Set FOCUS to AUTO.

Фокусировка вручную

Вы можете получить лучшие результаты путем регулировки вручную в следующих случаях:
- Режим автоматической фокусировки является неэффективным при выполнении съемки
  - объектов через покрытое инеем стекло с каплями воды
  - горизонтальных полос
  - объектов с малой контрастностью на таком фоне, как стена или небо
- Если Вы хотите выполнить изменение фокусировки с объекта на переднем плане на объект на заднем плане
- При выполнении съемки стационарных объектов с использованием треноги

(1) Установите переключатель FOCUS в положение MANUAL в режиме готовности или режиме записи. Появится индикатор ☞.
(2) Поверните регулятор NEAR/FAR для получения четкой фокусировки.

Для возвращения в режим автоматической фокусировки
Установите переключатель FOCUS в положение AUTO.

Focusing manually

To record distant subjects
When you press FOCUS down to INFINITY, the lens focuses on infinity. When you release FOCUS, your camcorder returns to the manual focus mode. Use this mode when your camcorder focuses on near objects even though you are trying to shoot a distant object.

Shooting in relatively dark places or shooting fast-moving subjects in relatively bright places
Shoot at the "W" (wide-angle) position after focusing at the "T" (telephoto) position.

When you shoot close to the subject
Focus at the end of the "W" (wide-angle) position.

The following indicators may appear
- ▲ when recording a distant subject.
- 👤 when the subject is too close to focus on.

Фокусировка вручную

Для съемки удаленных объектов
Если Вы нажмете вниз кнопку FOCUS в положение INFINITY, объектив выполнит фокусировку на бесконечность. Если Вы отпустите кнопку FOCUS, Ваша видеокамера в режим ручной фокусировки. Используйте этот режим, если Ваша видеокамера выполняет фокусировку на ближние объекты, даже если Вы пытаетесь выполнить съемку отдаленного объекта.

Съемка в относительно темных местах или съемка быстро движущихся объектов в относительно ярких местах
Выполняйте съемку в положении "W" (широкоугольное) после фокусировки в положении "T" (телефото).

Если Вы выполняете съемку вблизи объекта
Выполните фокусировку в конце положения "W" (широкоугольное).

Следующие индикаторы могут появиться
- ▲ при записи удаленного объекта.
- 👤 если объект находится слишком близко, чтобы выполнить фокусировку на него.

Superimposing a title

You can select one of eight preset titles and two custom titles (p. 55). You can also select the language, colour, size and position of titles.

(1) Press TITLE in the standby mode.
(2) Turn the SEL/PUSH EXEC dial to select 🗀, then press the dial.
(3) Turn the SEL/PUSH EXEC dial to select the desired title, then press the dial. The titles are displayed in the language you selected.
(4) Change the colour, size, or position, if necessary.
  ① Turn the SEL/PUSH EXEC dial to select the colour, size, or position, then press the dial. The item appears.
  ② Turn the SEL/PUSH EXEC dial to select the desired item, then press the dial.
  ③ Repeat steps ① and ② until the title is laid out as desired.
(5) Press the SEL/PUSH EXEC dial again to complete the setting.
(6) Press START/STOP to start recording.
(7) When you want to stop recording the title, press TITLE.

Наложение титра

Вы можете выбрать один из восьми предварительно установленных титров и два созданных Вами титра (стр. 55). Вы можете также выбрать язык, цвет, размер и положение титров.

(1) Нажмите кнопку TITLE в режиме ожидания.
(2) Поверните диск SEL/PUSH EXEC для выбора индикации 🗀, а затем нажмите диск.
(3) Поверните диск SEL/PUSH EXEC для выбора нужного титра, а затем нажмите диск. Титры будут отображаться на выбранном Вами языке.
(4) Измените цвет, размер или положение титра, если нужно.
  ① Поверните диск SEL/PUSH EXEC для выбора цвета, размера или положения титра, а затем нажмите диск. Появится нужный пункт.
  ② Поверните диск SEL/PUSH EXEC для выбора нужного пункта, а затем нажмите диск.
  ③ Повторяйте пункты ① и ② до тех пор, пока титр не будет расположен, как нужно.
(5) Нажмите диск SEL/PUSH EXEC еще раз для завершения установки.
(6) Нажмите кнопку START/STOP для начала записи.
(7) Если Вы хотите остановить запись титра, нажмите кнопку TITLE.

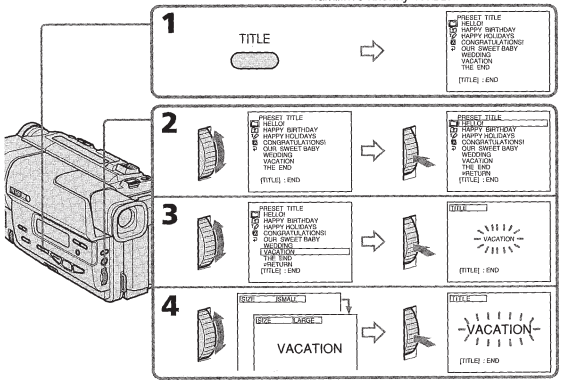

Superimposing a title

To superimpose the title while you are recording
Press TITLE while you are recording, and carry out steps 2 to 5. When you press the SEL/PUSH EXEC dial at step 5, the title is superimposed.

To select the language of a preset title
If you want to change the language, select 🅰 before step 2. Then select the desired language and return to step 2.

Note
Both the date and time or either of them may not be displayed depending on the size or position of the title.

If you display the menu or title menu while superimposing a title
The title is not recorded while the menu or title menu is displayed.

To use the custom title
If you want to use the custom title, select 🗀 in step 2.
If you have not made any custom title, "– – – –..." appears on the display.

Title setting
- The title colour changes as follows :
  WHITE ↔ YELLOW ↔ VIOLET ↔ RED ↔ CYAN ↔ GREEN ↔ BLUE
- The title size changes as follows :
  SMALL ↔ LARGE
  If you input 13 characters or more for a LARGE title, the title is automatically reduced in size after its position is set.
- The title position changes as follows :
  1 ↔ 2 ↔ 3 ↔ 4 ↔ 5 ↔ 6 ↔ 7 ↔ 8 ↔ 9
  The larger the position number, the lower the title is positioned.
  When you select the title size "LARGE", you cannot choose position 9.

When you are selecting and setting the title
You cannot superimpose the title displayed on the screen.

When you superimpose a title while you are recording
The beep does not sound.

Наложение титра

Для наложения титра во время записи
Нажмите кнопку TITLE во время записи и выполните действия пунктов со 2 по 5. Если Вы нажмете кнопку SEL/PUSH EXEC в пункте 5, титр будет наложен на изображение.

Для выбора языка предварительно установленного титра
Если Вы хотите изменить язык, выберите индикацию 🅰 перед выполнением действия пункта 2. Затем выберите нужный язык и вернитесь к пункту 2.

Примечание
Индикация даты и времени или же одна из них не могут отображаться на дисплее в зависимости от размера или положения титра.

Если на дисплее отображается меню или меню титров во время наложения титра
Титр не записывается во время отображения на дисплее меню или меню титров.

Для использования созданного Вами титра
Если Вы хотите использовать созданный Вами титр, выберите индикацию 🗀 в пункте 2. Если Вы не создали своего собственного титра, на дисплее появится индикация "– – – –...".

Установка титра
- Цвет титра изменяется следующим образом:
  WHITE ↔ YELLOW ↔ VIOLET ↔ RED ↔ CYAN ↔ GREEN ↔ BLUE
- Размер титра изменяется следующим образом:
  SMALL ↔ LARGE
  Если введете 13 или более символов для большого титра LARGE, то титр автоматически уменьшится по размеру после регулировки его положения.
- Положение титра изменяется следующим образом:
  1 ↔ 2 ↔ 3 ↔ 4 ↔ 5 ↔ 6 ↔ 7 ↔ 8 ↔ 9
  Чем больше номер положения титра, тем ниже будет расположен титр.
  Если Вы выберите размер "LARGE", Вы не сможете изменять положения 9.

Во время выбора и установки титра
Вы не можете налагать на изображение титр, отображаемый на экране.

При наложении титра во время записи
Зуммерного сигнала не будет.

Making your own titles

You can make up to two titles and store them in your camcorder. Each title can have up to 20 characters.

(1) Press TITLE in the standby or PLAYER mode.
(2) Turn the SEL/PUSH EXEC dial to select ↻, then press the dial.
(3) Turn the SEL/PUSH EXEC dial to select the first line (CUSTOM1) or second line (CUSTOM2), then press the dial.
(4) Turn the SEL/PUSH EXEC dial to select the column of the desired character, then press the dial.
(5) Turn the SEL/PUSH EXEC dial to select the desired character, then press the dial.
(6) Repeat steps 4 and 5 until you have selected all characters and completed the title.
(7) To finish making your own titles, turn the SEL/PUSH EXEC dial to select [SET], then press the dial. The title is stored in memory.
(8) Press TITLE to make the title menu disappear.

Создание своих собственных титров

Вы можете создать два собственных титра и хранить их в памяти видеокамеры. Каждый титр может состоять из 20 символов.

(1) Нажмите кнопку TITLE в режиме ожидания или в режиме PLAYER.
(2) Поверните диск SEL/PUSH EXEC для выбора индикации ↻, а затем нажмите диск.
(3) Поверните диск SEL/PUSH EXEC для выбора первой строки (CUSTOM1) или второй строки (CUSTOM2), а затем нажмите диск.
(4) Поверните диск SEL/PUSH EXEC для выбора колонки с нужным символом, а затем нажмите диск.
(5) Поверните диск SEL/PUSH EXEC нужного символа, а затем нажмите диск.
(6) Повторяйте действия пунктов 4 и 5 до тех пор, пока не выберите все символы и не составите полностью титр.
(7) Для завершения создания своих собственных титров поверните диск SEL/PUSH EXEC для выбора команды [SET], а затем нажмите диск. Титр будет занесен в память.
(8) Нажмите кнопку TITLE, чтобы меню титров исчезло.

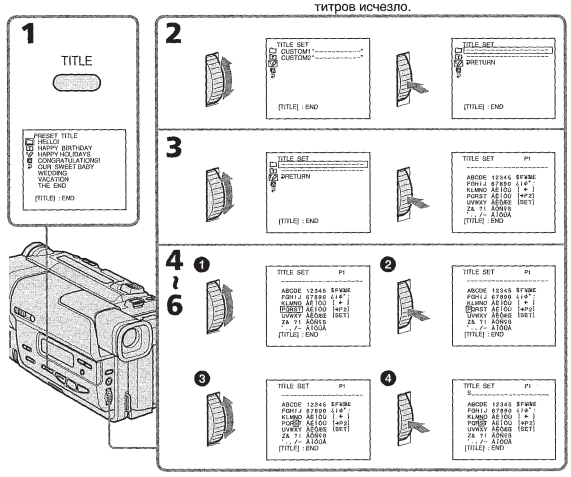

Making your own titles

To change a title you have stored
In step 3, select CUSTOM1 or CUSTOM2, depending on which title you want to change, then press the SEL/PUSH EXEC dial. Turn the SEL/PUSH EXEC dial to select [←], then press the dial to delete the title. The last character is erased. Enter the new title as desired.

If you take 5 minutes or longer to enter characters in the standby mode while a cassette is in your camcorder
The power automatically goes off. The characters you have entered remain stored in memory. Turn STANDBY down once and then up again, then proceed from step 1.
We recommend setting the POWER switch to PLAYER or removing the cassette so that your camcorder does not automatically turn off while you are entering title characters.

If you select [→P2]
The menu for selecting alphabet and Russian characters appear. Select [→P1] to return to the previous screen.

To delete the title
Select [←]. The last character is erased.

Создание своих собственных титров

Для изменения сохраненного в памяти титра
В пункте 3, выберите команду CUSTOM1 или CUSTOM2 в зависимости от того, какой титр Вы хотите изменить, а затем нажмите диск SEL/PUSH EXEC. Поверните диск SEL/PUSH EXEC для выбора индикации [←], а затем нажмите диск для удаления титра. Последний символ будет удален. Введите новый нужный символ.

Если при вводе символов пройдет 5 минут или более в режиме ожидания при вставленной кассете в Вашу видеокамеру
Питание автоматически выключится. Введенные символы будут сохранены в памяти. Поверните вниз, а затем снова вверх регулятор STANDBY, а затем выполните действия, начиная с пункта 1.
Рекомендуется установить переключатель POWER в положение PLAYER или вынуть кассету, так чтобы Ваша видеокамера автоматически не выключалась при вводе символов титров.

Если Вы выбрали команду [→P2]
Появится меню для выбора алфавита и русских букв. Выберите команду [→P1], чтобы вернуться к предыдущему экрану.

Для удаления титра
Выберите команду [←]. Последний символ будет удален.

Using the built-in light

You can use the built-in light to suit your shooting situation. The recommended distance between the subject and camcorder is about 1.5 m (5 feet).

Slide LIGHT to ON while your camcorder is in the standby mode. The built-in light turns on. The built-in light turns on/off by turning on/off STANDBY.

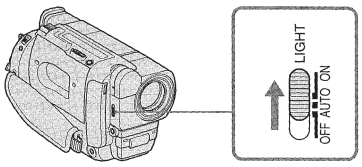

To turn off the built-in light
Slide LIGHT to OFF.

To turn on the built-in light automatically
Slide LIGHT to AUTO.
The built-in light automatically turns on and off according to the ambient brightness.
However, the built-in light automatically turns off if the built-in light turns on for more than about 5 minutes. In this case, turn STANDBY down once and up again.

CAUTION

Be careful not to touch the lighting section, because the plastic window and surrounding surfaces are hot while the light is on. It remains hot for a while after the light is turned off.

DANGER

Not to be handled by children.
Emits intense heat and light.
Use with caution to reduce the risk of fire or injury to persons.
Do not direct light at persons or materials from less than 1.22 m (4 feet) during use and until cool.
Slide LIGHT to OFF when not in use.

Использование встроенной подсветки

Вы можете использовать встроенную подсветку в соответствии с условиями съемки. Рекомендуемое расстояние между объектом и видеокамерой равно около 1,5 м.

Передвиньте переключатель LIGHT в положение ON в то время, когда видеокамера находится в режиме ожидания. Встроенная подсветка включится. Встроенная подсветка включается/выключается путем поворота регулятора STANDBY во включенное/выключенное положение.

Для выключения встроенной подсветки
Передвиньте переключатель LIGHT в положение OFF.

Для автоматического включения встроенной подсветки
Передвиньте переключатель LIGHT в положение AUTO.
Встроенная подсветка будет автоматически включаться и выключаться в соответствии с окружающими условиями освещения.
Однако, встроенная подсветка автоматически выключится, если она будет находиться во включенном состоянии более пяти минут. В этом случае, поверните регулятор STANDBY вниз и снова вверх.

ВНИМАНИЕ

Будьте осторожны, чтобы не прикасаться к секции подсветки, поскольку пластмассовое окно и прилегающая поверхность являются горячими при включенной подсветке. Эта секция будет оставаться горячей и некоторое время после выключения подсветки.

ОСТОРОЖНО

Детям пользоваться аппаратом запрещено.
Он излучает сильное тепло и свет.
Соблюдайте осторожность, что не допустить случайного воспламенения предметов и не травмировать людей вокруг.
Не направляйте подсветку на людей или материалы с расстояния менее 1,22 м во время пользования аппаратом до тех пор, пока он не остынет.
Передвиньте переключатель LIGHT в положение OFF, если не будете пользоваться аппаратом.

Using the built-in light

Notes
- The battery pack is quickly discharging while the built-in light is turned on. Slide LIGHT to OFF when not in use.
- When you do not use your camcorder, slide LIGHT to OFF and remove the battery pack to avoid turning on the built-in light.
- When flickering occurs while shooting in the auto mode, slide LIGHT to ON.
- The built-in light may turn on/off when you use the PROGRAM AE or backlight function while shooting in the auto mode.
- The built-in light may be turned off when inserting or ejecting a cassette.

Replacing the bulb

Use the Sony XB-3D halogen lamp (not supplied). The supplied halogen lamp is not on the market. Purchase the Sony XB-3D halogen lamp.
Remove the power source before replacing the bulb.

(1) Remove the built-in light unit while pushing the hole under the built-in light unit using a wire.
(2) Turn the bulb housing counterclockwise and detach from the built-in light unit.
(3) Replace the bulb using a dry cloth.
(4) Attach the bulb housing turning it clockwise, then replace the built-in light unit.

Использование встроенной подсветки

Примечания
- Батарейный блок быстро разряжается при включенной подсветке. Передвиньте переключатель LIGHT в положение OFF, если подсветка не используется.
- Если Вы не используете Вашу видеокамеру, передвиньте переключатель LIGHT в положение OFF и выньте батарейный блок во избежание включения встроенной подсветки.
- В случае мерцания во время съемки в автоматическом режиме передвиньте переключатель LIGHT в положение ON.
- Встроенная подсветка может включаться/выключаться при использовании функции PROGRAM AE или функции задней подсветки во время съемки в автоматическом режиме.
- Встроенная подсветка может выключаться при установке или извлечении кассеты.

Замена лампы накаливания

Используйте галогенную лампу Sony XB-3D (не прилагается). Прилагаемая галогенная лампа не поступает в розничную продажу. Приобретите галогенную лампу Sony XB-3D.
Перед заменой лампы накаливания выньте источник питания.

(1) Выньте встроенное устройство подсветки, нажав на отверстие под встроенным устройством с помощью проволоки.
(2) Поверните корпус лампы накаливания против часовой стрелки и отсоедините лампу от встроенного устройства подсветки.
(3) Отсоедините лампу накаливания с помощью сухой ткани.
(4) Прикрепите корпус лампы накаливания, повернув его по часовой стрелке, и замените встроенное устройство подсветки.

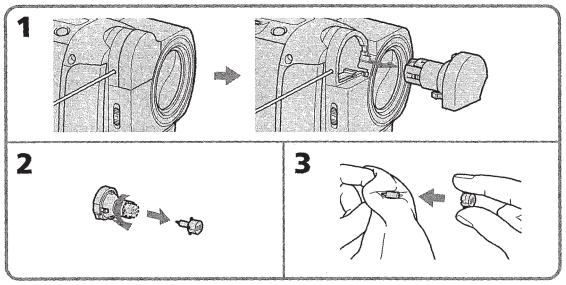

Using the built-in light

CAUTION

- When replacing the bulb, use only the Sony XB-3D halogen lamp (not supplied) to reduce the risk of fire.
- To prevent possible burn hazard, disconnect the power source before replacing and do not touch the bulb until the bulb becomes cool enough to handle (for about 30 minutes or more).

Note

To prevent the bulb from being smudged with finger prints, handle it with a dry cloth, etc. If the bulb is smudged, wipe it completely.

Использование встроенной подсветки

ВНИМАНИЕ

- При замене лампы накаливания используйте только галогенную лампу Sony XB-3D (не прилагается) для уменьшения вероятности воспламенения.
- Для предотвращения опасности получения ожога, отсоедините источник питания перед тем, как заменить лампу накаливания, и не прикасайтесь к лампе до тех пор, пока она достаточно не остынет (около 30 минут или более).

Примечание

Для предотвращения загрязнения лампы накаливания от отпечатков пальцев обращайтесь с ней осторожно, используя сухую ткань. В случае загрязнения лампы накаливания тщательно протрите ее.

— Advanced Playback Operations —

Playing back a tape with digital effects

During playback, you can process a scene using the digital effect functions: STILL, FLASH, LUMI. and TRAIL.

(1) During playback, press DIGITAL EFFECT and turn the SEL/PUSH EXEC dial until the desired digital effect indicator (STILL, FLASH, LUMI. or TRAIL) flashes.
(2) Press the SEL/PUSH EXEC dial.
The digital effect indicator lights up and the bars appear. In the STILL or LUMI. mode, the picture where you press the SEL/PUSH EXEC dial is stored in memory as a still picture.
(3) Turn the SEL/PUSH EXEC dial to adjust the effect.
For details of each digital effect function, see page 44.

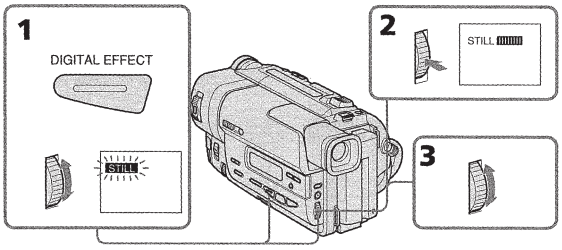

To cancel the digital effect function

Press DIGITAL EFFECT.

— Усовершенствованные операции воспроизведения —

Воспроизведение ленты с цифровыми эффектами

Во время воспроизведения, Вы можете видоизменять изображение с помощью функций: STILL, FLASH, LUMI. и TRAIL.

(1) Во время воспроизведения, нажмите кнопку DIGITAL EFFECT и поворачивайте диск SEL/PUSH EXEC до тех пор, пока не начнет мигать индикатор нужного цифрового эффекта (STILL, FLASH, LUMI. или TRAIL).
(2) Нажмите кнопку диск SEL/PUSH EXEC. Высветится индикатор цифрового эффекта и появятся полосы. В режиме STILL или LUMI. Изображение, на котором Вы нажмете кнопку диск SEL/PUSH EXEC, будет занесено в память как неподвижное изображение.
(3) Поверните диск SEL/PUSH EXEC для регулировки эффекта изображения. Подробные сведения по каждой функции цифровых эффектов приведены на стр. 44.

Для отмены функции цифровых эффектов

Нажмите кнопку DIGITAL EFFECT.

Playing back a tape with digital effects

Notes

- You cannot record image-processed pictures on your camcorder. Record them on the VCR using your camcorder as a player.
- In various speed playback, noise appears on the picture. This is not a malfunction.

STILL and LUMI. modes

- You can search a picture to image-process by pressing ▶▶ or ◀◀ in the playback mode. However, noise appears on the picture.
- You cannot delete a picture stored in memory even if you stop playing back a tape.

When you set the POWER switch to OFF

The digital effect function is automatically canceled.

Воспроизведение ленты с цифровыми эффектами

Примечания

- Вы не можете записывать видоизмененные изображения на Вашей видеокамере. Записывайте их на КВМ, используя Вашу видеокамеру в качестве плейера.
- При переменной скорости воспроизведения на изображении появятся помехи. Это не является неисправностью.

Режимы STILL и LUMI.

- Вы можете выполнять поиск видоизмененного изображения, нажимая кнопку ▶▶ или ◀◀ в режиме воспроизведения. Однако, на изображении появятся помехи.
- Вы не можете удалить изображение, сохраненное в памяти, даже если Вы остановите воспроизведение ленты.

Если Вы установите переключатель POWER в положение OFF

Функция цифровых эффектов будет автоматически отменена.

— Editing on Other Equipment —

Dubbing a tape

You can dub and edit tapes using your camcorder for playback and another VCR for recording.

Connect your camcorder to the VCR using the A/V connecting cable supplied with your camcorder.
Set the input selector on the VCR to LINE, if available.

(1) Insert a blank tape (or a tape you want to record over) into the VCR, and insert the recorded tape into your camcorder.
(2) Set the POWER switch to PLAYER.
(3) Play back the recorded tape on your camcorder.
(4) Start recording on the VCR.

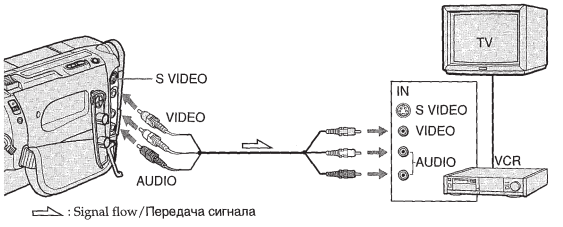

: Signal flow/Передача сигнала

When you have finished dubbing a tape

Press ■ on both your camcorder and the VCR.

To prevent deterioration of pictures from dubbing

Set EDIT to ON in the MENU settings before dubbing.

— Монтаж на другую аппаратуру —

Перезапись ленты

Вы можете перезаписывать и редактировать ленты, используя Вашу видеокамеру для воспроизведения, а другой КВМ для записи. Уменьшите громкость Вашей видеокамеры во время монтажа. В противном случае изображение может быть искажено.

Подсоедините Вашу видеокамеру к КВМ с помощью соединительного кабеля аудио/видео, который прилагается к Вашей видеокамере.
Установите селекторный переключатель входного сигнала на КВМ в положение LINE, если таковое имеется.

(1) Вставьте незаписанную ленту (или ленту, на которую Вы хотите выполнить запись) в КВМ и вставьте записанную ленту в Вашу видеокамеру.
(2) Установите переключатель POWER в положение PLAYER.
(3) Начните воспроизведение записанной ленты на Вашей видеокамере.
(4) Начните запись на Вашем КВМ.

Если Вы закончили перезапись ленты

Нажмите кнопку ■ как на видеокамере, так и на КВМ.

Для предотвращения ухудшения изображения при перезаписи

Перед выполнением перезаписи установите переключатель EDIT в положение ON в установках MENU.

Dubbing a tape

If you have displayed the viewfinder indicators on the TV
Make the indicators disappear by pressing DISPLAY so that they will not be superimposed on the edited tape.

You can edit on VCRs that have Video/Audio inputs and support the following systems
8 8 mm, Hi8 Hi8, VHS VHS, S-VHS S-VHS, VHSC VHSC, S-VHSC S-VHSC, β Betamax, mini DV or DV DV

If your VCR is a monaural type
Connect the yellow plug for video and the white plug for audio on both your camcorder and the VCR. You do not need to connect the red plug. With this connection, the sound will be monaural.

Connect using an S video cable (not supplied) to obtain high-quality pictures
With this connection, you do not need to connect the yellow (video) plug of the A/V connecting cable.
Connect an S video cable (not supplied) to the S video jacks of both your camcorder and the VCR.

Перезапись ленты

При отображении экранных индикаторов на экране телевизора
Добейтесь того, чтобы индикаторы исчезли, нажав кнопку DISPLAY, так чтобы они не были наложены на монтажную ленту.

Вы можете выполнять монтаж на KBM, в которых имеются гнезда видео/аудио, и которые поддерживают следующие системы
8 8 мм, Hi8 Hi8, VHS VHS, S-VHS S-VHS, VHSC VHSC, S-VHSC S-VHSC, β Betamax, mini DV или DV DV

Если Ваш KBM монофонического типа
Подсоедините желтый штекер для видеосигнала, а белый штекер для аудиосигнала к видеокамере и к KBM. Вам не нужно подсоединять красный штекер. При таком подсоединении звук будет монофоническим.

Выполните подсоединение с помощью кабеля S видео (не прилагается) для получения высококачественных изображений
При таком подсоединении Вам не нужно подсоединять желтый (видео) штекер соединительного кабеля аудио/видео. Подсоедините кабель S видео (не прилагается) к гнездам S видео на Вашей видеокамере и KBM.

Changing the MENU settings

To change the mode settings in the MENU settings, select the menu items with the SEL/PUSH EXEC dial. The factory settings can be partially changed. First, select the icon, then the menu item and then the mode.

(1) In the standby or PLAYER mode, press MENU.
(2) Turn the SEL/PUSH EXEC dial to select the desired icon, then press the dial to set.
(3) Turn the SEL/PUSH EXEC dial to select the desired item, then press the dial to set.
(4) Turn the SEL/PUSH EXEC dial to select the desired mode, and press the dial to set.
(5) If you want to change other items, select RETURN and press the dial, then repeat steps from 2 to 4.
For details, see "Selecting the mode setting of each item"(p. 65).

Изменение установок MENU

Для изменения установок режима в установках MENU выберите пункты меню с помощью диска SEL/PUSH EXEC. Заводская установка может быть частично изменена. Сначала выберите пиктограмму, затем пункт меню, а затем режим.
(1) В режиме ожидания или режиме PLAYER нажмите кнопку MENU.
(2) Поверните диск SEL/PUSH EXEC для выбора нужной пиктограммы, а затем нажмит е диск для установки.
(3) Поверните диск SEL/PUSH EXEC для выбора нужной пиктограммы, а затем нажмите диск для установки.
(4) Поверните диск SEL/PUSH EXEC для выбора нужной пиктограммы, а затем нажмите диск для установки.
(5) Если Вы хотите изменить другие пункты, выберите команду RETURN, а затем нажмите диск, после чего повторите действия пунктов со 2 по 4.
Подробные сведения приведены в разделе "выбор установок режима по каждому пункту" (стр. 69).

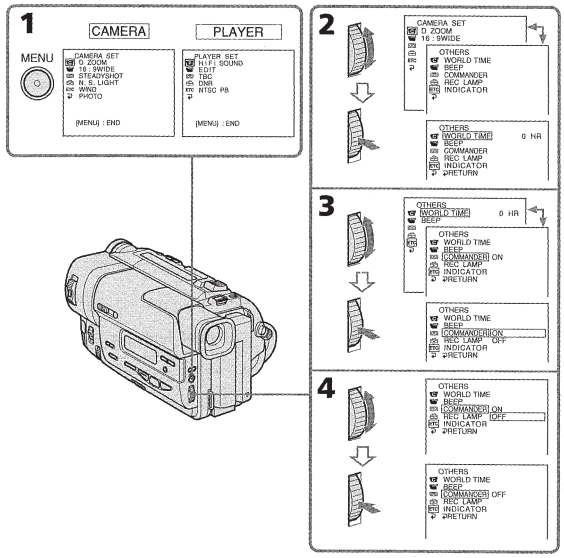

Changing the MENU settings

To make the MENU display disappear
Press MENU.

Menu items are displayed as the following five or six icons:
- CAMERA SET
- PLAYER SET
- VF SET (CCD-TR950E only)
- TAPE SET
- SETUP MENU
- OTHERS

Depending on your camcorder model
The MENU display may be different from that in this illustration.

Изменение установок MENU

Для того, чтобы исчезла индикация MENU
Нажмите кнопку MENU.

Пункты меню отображаются в виде пяти или шести, приведенных ниже, пиктограмм:
- CAMERA SET
- PLAYER SET
- VF SET (только модель CCD-TR950E)
- TAPE SET
- SETUP MENU
- OTHERS

В зависимости от модели Вашей видеокамеры
Индикация меню может отличаться от той, что показана на рисунке.

English

Selecting the mode setting of each item

● is the factory setting.

Menu items differ according to whether the POWER switch is set to PLAYER or CAMERA.

Icon/item	Mode	Meaning	POWER switch
D ZOOM	● ON	To activate digital zoom. More than 20× to 80× (360× in some areas) zoom is performed digitally (p. 22)	CAMERA
	OFF	To prevent the deterioration of the picture quality	
16:9WIDE	● OFF	—	CAMERA
	CINEMA	To record in the CINEMA mode (p. 37)	
	16:9FULL	To record in the 16:9FULL mode	
STEADYSHOT	● ON	To compensate for camera-shake	CAMERA
	OFF	To cancel the SteadyShot function. Natural pictures are produced when shooting a stationary object with a tripod.	
N.S. LIGHT	● ON	To use the NightShot Light function (p. 25)	CAMERA
	OFF	To cancel the NightShot Light function	
WIND	● OFF	—	CAMERA
	ON	To reduce wind noise when recording in strong wind	
PHOTO	● NORMAL	To activate the normal photo function	CAMERA
	FADE	To activate the fade photo function	
	SHUTTER	To activate the shutter photo function	

Notes on the SteadyShot function
- The SteadyShot function will not correct excessive camera-shake.
- Attachment of a conversion lens (not supplied) may influence the SteadyShot function.
- SteadyShot does not operate in the 16:9FULL mode. If you set STEADYSHOT to ON in the MENU settings, the indicator flashes.

Changing the MENU settings

Icon/item	Mode	Meaning	POWER switch
HiFi SOUND	● STEREO	To play back a stereo tape or dual sound track tape	PLAYER
	1	To play back a monaural tape or dual sound track tape with main sound	
	2	To play back a dual sound track tape with sub sound	
EDIT	● OFF	—	PLAYER
	ON	To minimize picture deterioration when editing	
TBC	● ON	To correct jitter	PLAYER
	OFF	To not correct jitter. Set TBC to OFF when playing back a tape on which you have dubbed over and recorded the signal of a TV game or similar machine.	
TBC stands for "Time Base Corrector".			
DNR	● ON	To reduce picture noise	PLAYER
	OFF	To reduce a conspicuous afterimage when the picture has a lot of movement	
DNR stands for "Digital Noise Reduction".			
NTSC PB	● ON PAL TV	To play back a tape recorded on your camcorder on a PAL system TV	PLAYER
	NTSC 4.43	To play back a tape recorded in the NTSC colour system on a TV with the NTSC 4.43 mode	
VF B.L. (CCD-TR950E only)	● BRT NORMAL	To set the brightness in the viewfinder normal	PLAYER CAMERA
	BRIGHT	To brighten the viewfinder screen	

Note on NTSC PB
When you play back a tape on a Multi System TV, select the best mode while viewing the picture on the TV.

In more than 5 minutes after removing the power source
The "WIND" "COMMANDER" "EDIT" and "HiFi SOUND" items are returned to their factory settings.
The other menu items are held in memory even when the battery is removed, as long as the lithium battery is installed.

Notes on VF B.L. (CCD-TR950E only)
- When you select "BRIGHT", battery life is reduced by about 10 percent during recording.
- When you use power sources other than the battery pack, "BRIGHT" is automatically selected.

Changing the MENU settings

Icon/item	Mode	Meaning	POWER switch
REC MODE	● SP	To record in SP (Standard Play) mode	CAMERA
	LP	To increase the recording time to twice the SP mode	
ORC TO SET		To automatically adjust the recording condition to get the best possible recording. Press START/STOP to start adjustment. Your camcorder takes about 10 seconds to check the tape condition and then returns to the Standby mode.	CAMERA
ORC stands for "Optimizing the Recording Condition".			
REMAIN	● AUTO	To display the remaining tape bar: • for about 8 seconds after your camcorder is turned on and calculates the remaining amount of tape • for about 8 seconds after a cassette is inserted and your camcorder calculates the remaining amount of tape • for about 8 seconds after ► is pressed in PLAYER mode • for about 8 seconds after DISPLAY on the Remote Commander is pressed to display the viewfinder indicators • for the period of tape rewinding, forwarding or picture search in the PLAYER mode	PLAYER CAMERA
	ON	To always display the remaining tape indicator	

Notes on the LP mode
- When you record a tape in the LP mode on your camcorder, we recommend playing the tape on your camcorder. When you play back the tape on other camcorders or VCRs, noise may occur in pictures or sound.
- Noise may occur also when you play on your camcorder tapes recorded in the LP mode on other camcorders or VCRs.
- When you record a tape in the LP mode on your camcorder, recording is carried out in the standard 8 mm system.

Notes on ORC setting
- Each time you eject the cassette, the ORC setting will be canceled. If necessary, reset the setting.
- You cannot use this setting on a tape with the red mark on the cassette exposed. (i. e. the tape is write-protected)
- When you set ORC TO SET, a non-recorded section of about 0.1 seconds appears on the tape. However, note that this non-recorded section disappears from the tape when you continue recording from this section.
- To check if you have already set the ORC setting, select ORC TO SET in the MENU settings. "ORC ON" is displayed if ORC TO SET is already set.

Changing the MENU settings

Icon/item	Mode	Meaning	POWER switch
CLOCK SET		To reset the date or time (p. 73)	CAMERA
AUTO DATE	● ON	To record the date for 10 seconds after recording has started	CAMERA
	OFF	To cancel the auto date function	
LTR SIZE	● NORMAL	To display selected menu items in normal size	PLAYER CAMERA
	2×	To display selected menu items at twice the normal size	
DEMO MODE	● ON	To make the demonstration appear	CAMERA
	OFF	To cancel the demonstration mode	

Notes on DEMO MODE
- You cannot select DEMO MODE when a cassette is inserted in your camcorder.
- DEMO MODE is set to STBY (Standby) at the factory and the demonstration starts about 10 minutes after you have set the POWER switch to CAMERA without a cassette inserted. Note that you cannot select STBY of DEMO MODE in the MENU settings.
- When NIGHTSHOT is set to ON, "NIGHTSHOT" appears in the viewfinder and you cannot select DEMO MODE in the MENU settings.

Icon/item	Mode	Meaning	POWER switch
WORLD TIME		To set the clock to the local time. Turn the SEL/PUSH EXEC dial to set a time difference. The clock changes by the time difference you set here If you set the time difference to 0, the clock returns to the originally set time.	CAMERA
BEEP	● MELODY	To output the melody when you start/stop recording or when an unusual condition occurs on your camcorder	PLAYER CAMERA
	NORMAL	To output the beep sound instead of the melody	
	OFF	To cancel the melody and beep sound	
COMMANDER	● ON	To activate the Remote Commander supplied with your camcorder	PLAYER CAMERA
	OFF	To deactivate the Remote Commander to avoid remote control misoperation caused by other VCR's remote control	
REC LAMP	● ON	To light up the camera recording lamp at the front of your camcorder	CAMERA
	OFF	To turn the camera recording lamp off so that the subject is not aware of the recording	
INDICATOR	● BL OFF	To turn off the backlight on display window	PLAYER CAMERA
	BL ON	To turn on the backlight	

Notes on INDICATOR
- When you select "BL ON", battery life is reduced by about 10 percent during recording.
- When you use power sources other than the battery pack, "BL ON" is automatically selected.

Resetting the date and time

The clock is set at the factory to London time for United Kingdom to Paris time for the other European countries.
The date and time are held in memory by the lithium battery. If you replace the lithium battery with the battery pack or other power source connected, you need not reset the date and time. You must reset the date and time when the lithium battery becomes dead with no power source installed.
First, set the year, then the month, the day, the hour and then the minute.

(1) While the camcorder is in the standby mode, press MENU to display the MENU settings.
(2) Turn the SEL/PUSH EXEC dial to select , then press the dial.
(3) Turn the SEL/PUSH EXEC dial to select CLOCK SET, then press the dial.
(4) Turn the SEL/PUSH EXEC dial to adjust the desired year, then press the dial.
(5) Set the month, day and hour by turning the SEL/PUSH EXEC dial and pressing the dial.
(6) Set the minute by turning the SEL/PUSH EXEC dial and pressing the dial by the time signal. The clock starts to move.
(7) Press MENU to make the MENU settings disappear. The time indicator appears. Press TIME to make the time indicator disappear.

Переустановка даты и времени

Часы установлены на предприятии-изготовителе на время Лондона для моделей Соединенного Королевства и на время Парижа для других европейских моделей.
Дата и время сохраняются в памяти с помощью литиевой батарейки. Если Вы от литиевой батарейки переключитесь на батарейный блок или другой подсоединенный источник питания, Вам нужно будет переустановить дату и время. Вам нужно также переустановить дату и время, когда литиевая батарейка разрядится и в это время не будет вставлен источник питания.
Сначала установите год, затем месяц, день, час и минуту.

(1) В режиме ожидания видеокамеры нажмите кнопку MENU для отображения установок MENU.
(2) Поверните диск SEL/PUSH EXEC для выбора индикации , а затем нажмите диск.
(3) Поверните диск SEL/PUSH EXEC для выбора команды CLOCK SET, а затем нажмите диск.
(4) Поверните диск SEL/PUSH EXEC для выбора нужного года, а затем нажмите диск.
(5) Установите месяц, день и час путем вращения диска SEL/PUSH EXEC и нажимания диска.
(6) Установите минуту путем вращения диска SEL/PUSH EXEC и нажимания диска в момент передачи сигнала точного времени. Часы начнут функционировать.
(7) Нажмите кнопку MENU для того, чтобы исчезли установки MENU. Появится индикатор времени. Нажмите кнопку TIME для того, чтобы индикатор исчез.

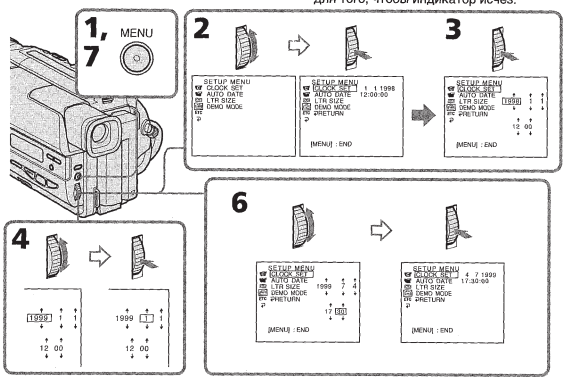

Resetting the date and time

To check the preset date and time

Press DATE to display the date indicator.
Press TIME to display the time indicator.
Press DATE (or TIME) and then press TIME (or DATE) to simultaneously display the date and time indicator.
Press DATE and/or TIME again. The date and/or time indicator disappears.

The year changes as follows:

1998 ↔ 1999 ← · · · · → 2029

Auto date function
When you use your camcorder for the first time, turn it on and reset the date and time to your time before you start recording (p. 73). The date is automatically recorded for 10 seconds after you start recording **(Auto date function)**. This function works only once a day.

Note on the time indicator
The internal clock of your camcorder operates on a 24-hour cycle.

Note on the auto date function
You can change the AUTO DATE setting by selecting ON or OFF in the MENU settings. The auto date function automatically displays the date once a day.
However, the date may automatically appear more than once a day if:
– you reset the date and time.
– you eject and insert the tape again.
– you stop recording within 10 seconds.
– you set AUTO DATE to OFF once and set it back ON in the MENU settings.

Переустановка даты и времени

Для проверки предварительно установленных даты и времени

Нажмите кнопку DATE для отображения индикатора даты. Нажмите кнопку TIME для отображения индикатора времени. Нажмите кнопку DATE (или TIME), а затем нажмите кнопку TIME (или DATE) для одновременного отображения индикатора даты и времени. Нажмите еще раз кнопку DATE и/или TIME. Индикатор даты и/или времени исчезнет.

Год изменяется следующим образом:

1998 ↔ 1999 ← · · · · → 2029

Функция автоматической даты
Если Вы используете видеокамеру первый раз, включите ее и переустановите дату и время в соответствии со своим часовым поясом, прежде чем начать запись (стр. 73). Дата будет автоматически записываться в течение 10 секунд после начала записи **(функция автоматической даты)**. Эта функция работает один раз в день.

Примечание по индикатору времени
Встроенные часы Вашей видеокамеры работают в 24-часовом режиме.

Примечание по функции автоматической даты
Вы можете изменять установку AUTO DATE путем выбора положений ON или OFF в установках MENU. Функция автоматической даты автоматически отображает дату один раз в день.
Однако, дата может автоматически появляться больше одного раза при:
– переустановке даты и времени.
– выталкивании и установке ленты обратно на место.
– остановке записи в пределах 10 секунд.
– установке команды AUTO DATE в положение OFF и возвращении в положение ON в установках MENU.

Usable cassettes and playback modes

Selecting the cassette type

You can use either Hi8 or standard 8 mm video cassettes on your camcorder. When you use a Hi8 video cassette, recording and playback are carried out in the Hi8 system. When you use a standard 8 mm video cassette, recording and playback are carried out in the standard 8 mm system.
However, if you record on a Hi8 video cassette in the LP mode, recording is carried out in the standard 8 mm system.
If you play back a tape recorded on a different video recorder on your camcorder, the Playback mode is automatically selected according to the format in which the tape has been recorded.

This Hi8 system is an extension of the standard 8 mm system, and was developed to produce higher quality pictures.
You cannot playback a tape recorded in the Hi8 system correctly on video recorder/players other than a Hi8 video recorder/player.

What is video Hi8 XR ?

"video Hi8 XR" is a function that further enhances the image quality of video Hi8. This function allows you to record and playback pictures with clearer details.
Video tapes recorded on a camcorder having the "XR" function show excellent picture quality when they are played back on an "XR" camcorder.
The playback quality will be the normal quality of the Hi8 camcorder when video tapes recorded on an "XR" camcorder are played back by a conventional Hi8 camcorder or when video tapes recorded on a conventional Hi8 camcorder are played back on the "XR" camcorder.

* "XR" stands for "Extended Resolution."

Используемые кассеты и режимы воспроизведения

Выбор типа кассеты

Вы можете использовать на Вашей видеокамере либо видеокассеты Hi8, либо стандартные 8-мм видеокассеты. Если Вы используете видеокассету Hi8, запись и воспроизведение будут выполняться в системе Hi8. Если Вы используете стандартную 8-мм видеокассету, запись и воспроизведение будут выполняться в стандартной 8-мм системе.
Однако, если Вы выполняете запись на видеокассету Hi8 в режиме LP, запись будет выполняться в стандартной 8-мм системе. Если Вы будете воспроизводить на Вашей видеокамере ленту, записанную на разных видеомагнитофонах, то режим воспроизведения будет выбираться автоматически в соответствии с форматом, в котором была записана лента.

Система Hi8 является модификацией стандартной 8-мм системы и была разработана для получения высококачественных изображений.
Вы не сможете воспроизвести надлежащим образом ленту, записанную в системе Hi8, на видеомагнитофоне/плейере, который не относится к видеомагнитофону/плейеру Hi8.

Что такое video Hi8 XR ?

"video Hi8 XR" является функцией, которая еще улучшает качество изображения video Hi8. Эта функция позволяет Вам записывать и воспроизводить изображения с утонченными деталями.
Видеоленты, записанные на видеокамере, имеющей функцию "XR", обеспечивают превосходное качество изображения при воспроизведении на видеокамере "XR". Качество изображения будет обычным качеством, соответствующим видеокамере Hi8, при воспроизведении видеолент, записанных на видеокамере "XR", на обычной видеокамере Hi8 или же при воспроизведении видеолент, записанных на обычной видеокамере Hi8, на видеокамере "XR".

* "XR" означает "улучшенная разрешающая способность".

Usable cassettes and playback modes

When you play back

The Playback mode (SP/LP) and system (Hi8/standard 8 mm) are automatically selected according to the format in which the tape has been recorded. The quality of the recorded picture in the LP mode, however, will not be as good as the SP mode.

Note on AFM HiFi stereo

When you play back a tape, the sound will be monaural if:
- You record the tape on your camcorder, then play it back on an AFM HiFi monaural video recorder/player.
- You record the tape on an AFM HiFi monaural video recorder, then play it back on your camcorder.

Foreign 8 mm video

Because TV colour systems differ from country to country, you may not be able to play back foreign pre-recorded tapes. Refer to "Using your camcorder abroad" to check the TV colour systems used in foreign countries.

Playing back an NTSC-recorded tape

You can play back tapes recorded in the NTSC video system using the SP mode. If the tape is recorded in the AFM HiFi system, the AFM HiFi sound is reproduced. However, note that the following will occur during playback of an NTSC-recorded tape.
- When playing back a tape on a TV screen, you may not get the original colour depending on the TV. When you play back on a Multi System TV, set NTSC PB to the desired mode in the menu settings.
- During playback, a black band appears on the lower part of the viewfinder. (CCD-TR913E only)
- You cannot play back a tape recorded in the NTSC video system with the LP mode on a TV screen.
- If a tape has portions recorded in PAL and NTSC video systems, the tape counter reading is not correct. This discrepancy is due to the difference between the counting cycle of the two video systems.
- You cannot edit the NTSC-recorded tape onto another VCR.

Используемые кассеты и режимы воспроизведения

При выполнении воспроизведения

Режим воспроизведения (SP/LP) и система (Hi8/стандартная 8-мм система) выбираются автоматически в соответствии с форматом, в котором была выполнена запись на ленте. Однако, качество записанного изображения в режиме LP не будет таким хорошим, как в режиме SP.

Примечание по системе AFM HiFi

При воспроизведении ленты звук будет монофоническим, если:
- Вы запишите ленту на Вашем компьютере, а затем будете воспроизводить монофоническом видеомагнитофоне/плейере AFM HiFi.
- Вы запишите ленту на монофоническом видеомагнитофоне/плейере AFM HiFi, а затем будете воспроизводить на Вашем компьютере.

Иностранные 8-мм видеоленты

Поскольку системы цветного телевидения отличаются от страны к стране, возможно Вы не сможете воспроизводить иностранные предварительно записанные ленты. См. раздел "Использование Вашей видеокамеры за границей" для проверки систем цветного телевидения, используемых в других странах.

Воспроизведение лент, записанных в системе NTSC

Вы можете воспроизводить ленты, записанные в системе NTSC, используя режим SP. Если лента записана в системе AFM HiFi, то будет воспроизводиться звук AFM HiFi. Однако, имейте в виду, что во время воспроизведения лент, записанных в системе NTSC, будет иметь место следующее.
- При воспроизведении ленты на экране телевизора Вы можете не получить первоначальные цвета в зависимости от типа телевизора. При воспроизведении на мультисистемном телевизоре установите переключатель NTSC PB на нужный режим в установках меню.
- Во время воспроизведения в нижней части видоискателя будет появляться черная полоса (только модель CCD-TR913E).
- Вы не можете воспроизводить ленту, записанную в видеосистеме NTSC в режиме LP на экране телевизора.
- Если на ленте имеются участки, записанные в видеосистемах PAL и NTSC, то функционирование счетчика ленты будет неправильным. Это расхождение объясняется разницей между счетными циклами двух видеосистем.
- Вы не можете выполнять монтаж ленты, записанной в системе NTSC, на другой КВМ.

Usable cassettes and playback modes

When you playback a dual sound track tape

When you play back a dual sound track tape recorded in an AFM HiFi stereo system, set "HiFi SOUND" to the desired mode in the MENU settings (p. 64).

Sound from speaker

HiFi Sound Mode	Playing back a stereo tape	Playing back a dual sound track tape
STEREO	Stereo	Main sound and sub sound
1	Monaural	Main sound
2	Unnatural sound	Sub sound

You cannot record dual sound programmes on your camcorder.

Используемые кассеты и режимы воспроизведения

При воспроизведении ленты с двойной звуковой дорожкой

При воспроизведении ленты с двойной звуковой дорожкой, записанной в стереофонической системе AFM HiFi установите команду "HiFi SOUND" в нужный режим в установках MENU (стр. 64).

Звук от динамика

Режим звучания HiFi	Воспроизведение стереофонической ленты	Воспроизведение ленты с двойной звуковой дорожкой
STEREO	Стерео	Главный звук и вспомогательный звук
1	Монофонический	Главный звук
2	Необычный звук	Вспомогательный звук

Вы не можете записывать программы с двойным звучанием на Вашей видеокамере.

Changing the lithium battery in your camcorder

When replacing the lithium battery, keep the battery pack or other power source attached. Otherwise, you will need to reset the date, time and other items in the MENU settings hold in memory by the lithium battery.

Insert the battery with the positive (+) side facing out. When the battery becomes weak or dead, the indicator flashes in the viewfinder for about 5 seconds when you set the POWER switch to CAMERA. In this case, **replace the battery with a Sony CR2025 lithium battery. Use of any other battery may present a risk of fire or explosion.** Discard used batteries according to the manufacturer's instructions.

WARNING
The battery may explode if mistreated. Do not recharge, disassemble, nor dispose of it in fire.

Lithium battery
- Keep the lithium battery out of the reach of children.
- Should the battery be swallowed, immediately consult a doctor.
- Wipe the battery with a dry cloth to ensure good contact.

Lithium battery installed at the factory
This battery may not last 1 year.

Замена литиевой батарейки в Вашей видеокамере

При замене литиевой батарейки батарейный блок или другой источник питания должен быть прикреплен к видеокамере. В противном случае Вам понадобится переустанавливать дату, время и другие пункты в установках MENU, хранимых в памяти видеокамеры с помощью литиевой батарейки.

Вставьте батарейку так, чтобы положительный (+) полюс был обращен наружу. Если батарейка станет слабой или разрядится, индикатор будет мигать в видоискателе около 5 секунд, если переключатель POWER установлен в положение CAMERA. В этом случае, **замените батарейку на литиевую батарейку Sony CR2025. Использование какой-либо другой батарейки создает риск воспламенения или взрыва.** Ликвидируйте использованные батарейки в соответствии с инструкциями предприятия-изготовителя.

ПРЕДУПРЕЖДЕНИЕ
Если с батарейкой неправильно обращаться, она может взорваться. Не перезаряжайте, не разбирайте и не бросайте в огонь батарейку.

Литиевая батарейка
- Храните литиевую батарейку в месте, не доступном для детей.
- В случае, если кто-либо случайно проглотит батарейку, следует немедленно обратиться к врачу.
- Протрите батарейку сухой тканью для обеспечения хорошего контакта.

Литиевая батарейка, установленная на заводе
Этой батарейки может не хватить на 1 год.

Changing the lithium battery in your camcorder

Changing the lithium battery

(1) Open the lid of the lithium battery compartment.
(2) Push the lithium battery down once and pull it out from the holder.
(3) Install a Sony CR2025 lithium battery with the positive (+) side facing out.
(4) Close the lid.

Замена литиевой батарейки в Вашей видеокамере

Замена литиевой батарейки

(1) Откройте панель ЖКД и откройте крышку отсека для литиевой батарейки.
(2) Нажмите литиевую батарейку вниз один раз и выньте ее из держателя.
(3) Установите литиевую батарейку Sony CR2025 так, чтобы положительный (+) полюс был обращен наружу.
(4) Закройте крышку.

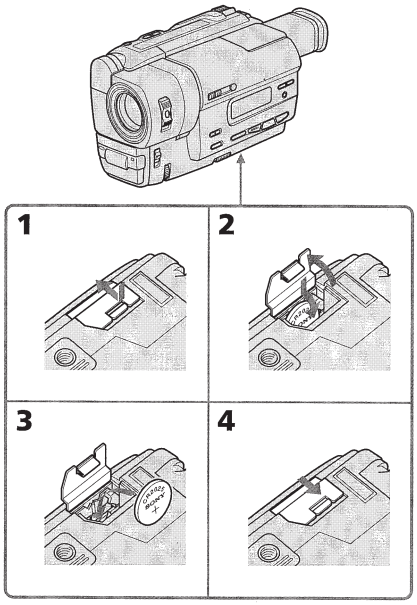

English

Troubleshooting

If you run into any problem using your camcorder, use the following table to troubleshoot the problem. If the problem persists, disconnect the power source and contact your Sony dealer or local authorized Sony service facility. If "C:□□:□□" appears in the viewfinder, the self-diagnosis display function has worked. See page 83.

In the recording mode

Symptom	Cause and/or Corrective Actions
START/STOP does not operate.	• The POWER switch is set to PLAYER. → Set it to CAMERA. (p. 19) • STANDBY is set to LOCK. → Turn STANDBY to STANDBY. (p. 19) • The tape has run out. → Rewind the tape or insert a new one. (p. 18, 32) • The write-protect tab is set to expose the red mark. → Use a new tape or slide the tab. (p. 18) • The tape is stuck to the drum (moisture condensation). → Remove the cassette and leave your camcorder for at least 1 hour to acclimatize. (p. 91)
Recording stops in a few seconds.	• START/STOP MODE is set to 5SEC or ⏚. → Set it to ⏚. (p. 23)
The power goes off.	• While being operated in the CAMERA mode, your camcorder has been in the standby mode for more than 5 minutes. → Turn STANDBY down once and then up again. (p. 19)
The image on the viewfinder screen is not clear.	• The viewfinder lens is not adjusted. → Adjust the viewfinder lens. (p. 21)
The SteadyShot function does not work.	• STEADYSHOT is set to OFF in the MENU settings. → Set it to ON. (p. 64) • The SteadyShot function does not work when the wide mode is set to 16:9FULL.
The autofocusing function does not work.	• FOCUS is set to MANUAL. → Set it to AUTO. (p. 51) • Shooting conditions are not suitable for autofocus. → Set FOCUS to MANUAL to focus manually. (p. 51)
The fader function does not work.	• START/STOP MODE is set to 5SEC or ⏚. → Set it to ⏚. (p. 23) • The digital effect function is working. → Cancel it. (p. 44)
The ⊗ indicator flashes in the viewfinder.	• The video heads may be dirty. → Clean the heads using the Sony V8-25CLH/V8-25CLD cleaning cassette (not supplied). (p. 92)

Troubleshooting

Symptom	Cause and/or Corrective Actions
A vertical band appears when you shoot a subject such as lights or a candle flame against a dark background.	• The contrast between the subject and background is too high. Your camcorder is not a malfunction.
A vertical band appears when you shoot a very bright subject	• Your camcorder is not a malfunction.
Some tiny white spots appear in the viewfinder.	• Slow shutter, low lux or NightShot +Slow shutter mode is activated. This is not a malfunction.
An unknown picture is displayed in the viewfinder.	• If 10 minutes elapse after you set the POWER switch to CAMERA or DEMO MODE is set to ON in the MENU settings without a cassette inserted, your camcorder automatically starts the demonstration. → Insert a cassette and the demonstration stops. You can also cancel DEMO MODE. (p. 68)
The picture is recorded in incorrect or unnatural colours.	• NIGHTSHOT is set to ON. → Set it to OFF. (p. 25)
Picture appears too bright, and the subject does not appear in the viewfinder.	• NIGHTSHOT is set to ON in a bright place. → Set it to OFF, or use the NightShot function in a dark place. (p. 25)

In the playback mode

Symptom	Cause and/or Corrective Actions
The tape does not move when a video control button is pressed.	• The POWER switch is set to CAMERA or OFF. → Set it to PLAYER. (p. 32) • The tape has run out. → Rewind the tape. (p. 32)
The playback picture is not clear or does not appear.	• The television's video channel is not adjusted correctly. → Adjust it. (p. 29) • EDIT is set to ON in the MENU settings. → Set it to OFF. (p. 64) • The video head may be dirty. → Clean the heads using the Sony V8-25CLH/V8-25CLD cleaning cassette (not supplied). (p. 92)
No sound or only a low sound is heard when playing back a tape.	• The stereo tape is played back with HiFi SOUND set to 2 in the MENU settings. → Set it to STEREO. (p. 64)

In the recording and playback modes

Symptom	Cause and/or Corrective Actions
The power does not turn on.	• The battery pack is not installed, or is dead or nearly dead. → Install a charged battery pack. (p. 12, 13) • The AC power adaptor is not connected to the mains. → Connect the AC power adaptor to the mains. (p. 17)

(Continued on the following page)

Troubleshooting

Symptom	Cause and/or Corrective Actions
The battery pack is quickly discharged.	• Your camcorder does not operate when you use a battery pack that is not an "InfoLITHIUM" battery pack. → Use an "InfoLITHIUM" battery pack. (p. 16) • The operating temperature is too low. • The battery pack is not fully charged. → Charge the battery pack again. (p. 13) • The battery pack is completely dead, and cannot be recharged. → Replace with a new battery pack. (p. 12)
The battery remaining indicator does not indicate the correct time.	• You have used the battery pack in an extremely hot or cold environment for a long time. • The battery pack is completely dead, and cannot be recharged. → Replace with a new battery pack. (p. 12) • The battery is dead. → Use a charged battery pack. (p. 12, 13)
The cassette cannot be removed from the holder.	• The power source is disconnected. → Connect it firmly. (p. 12, 17) • The battery is dead. → Use a charged battery pack or the AC power adaptor. (p. 12, 13)
The ⏏ and ⏏ indicators flash and no functions except for cassette ejection work.	• Moisture condensation has occurred. → Remove the cassette and leave your camcorder for at least 1 hour to acclimatize. (p. 91)

Others

Symptom	Cause and/or Corrective Actions
The Remote Commander supplied with your camcorder does not work.	• COMMANDER is set to OFF in the MENU settings. → Set it to ON. (p. 64) • Something is blocking the infrared rays. → Remove the obstacle. • The batteries inserted in the battery holder with the + – polarities incorrectly matching the + – marks. → Insert the batteries with the correct polarity. (p. 104) • The batteries are dead. → Insert new ones. (p. 104)
The date or time indicator does not appear, and the bars "--:--:--" appear.	• Reset the date and time. (p. 73)
The melody or beep sounds for 5 seconds.	• Moisture condensation has occurred. → Remove the cassette and leave your camcorder for at least 1 hour to acclimatize. (p. 91) • Some troubles has occurred in your camcorder. → Remove the cassette and insert it again, then operate your camcorder.
While charging the battery pack, no indicator appears or the indicator flashes in the display window.	• The AC power adaptor is disconnected. → Connect it firmly. (p. 13) • Something is wrong with the battery pack. → Contact your Sony dealer or local authorized Sony service facility.

English

Self-diagnosis display

Your camcorder has a self-diagnosis display function.
This function displays the current condition of your camcorder as a 5-digit code (a combination of a letter and figures) in the viewfinder or the display window. If a 5-digit code is displayed, check the following code chart. The last two digits (indicated by □□) will differ depending on the state of your camcorder.

Viewfinder

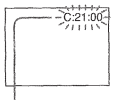

Self-diagnosis display
- C:□□:□□
  You can service your camcorder yourself.
- E:□□:□□
  Contact your Sony dealer or local authorized Sony facility.

Five-digit display	Cause and/or Corrective Actions
C:04:□□	• You are using a battery pack that is not an "InfoLITHIUM" battery pack. → Use an "InfoLITHIUM" battery pack. (p. 16)
C:21:□□	• Moisture condensation has occurred. → Remove the cassette and leave your camcorder for at least 1 hour to acclimatize. (p. 91)
C:22:□□	• The video heads are dirty. → Clean the heads using the Sony V8-25CLH/V8-25CLD cleaning cassette (not supplied). (p. 92)
C:31:□□ C:32:□□	• A malfunction other than the above that you can service has occurred. → Remove the cassette and insert it again, then operate your camcorder. → Disconnect the mains lead of the AC power adaptor or remove the battery pack. After reconnecting the power source, operate your camcorder.
E:61:□□ E:62:□□	• A malfunction that you cannot service has occurred. → Contact your Sony dealer or local authorized Sony service facility and inform them of the 5-digit code. (example: E:61:10)

If you are unable to rectify the problem even if you try corrective actions a few times, contact your Sony dealer or local authorized Sony service facility.

Additional information/Дополнительная информация

Warning indicators and messages

If indicators and messages appear in the viewfinder or the display window, check the following:
See the page in parentheses "( )" for more information.
The indicators and messages are displayed in yellow.

Warning indicators

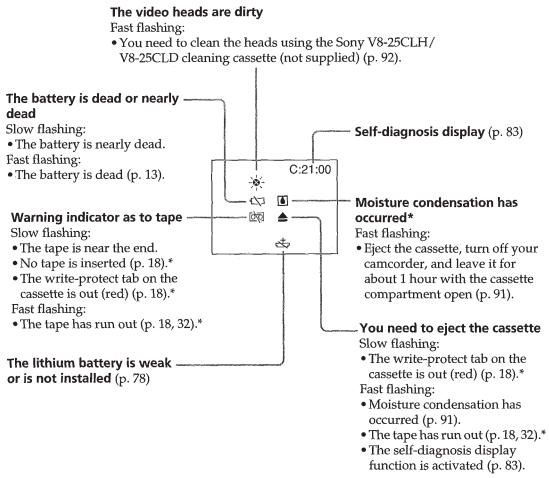
The video heads are dirty
Fast flashing:
• You need to clean the heads using the Sony V8-25CLH/V8-25CLD cleaning cassette (not supplied) (p. 92).
The battery is dead or nearly dead
Slow flashing:
• The battery is nearly dead.
Fast flashing:
• The battery is dead (p. 13).
Self-diagnosis display (p. 83)
C:21:00
Warning indicator as to tape
Slow flashing:
• The tape is near the end.
• No tape is inserted (p. 18).*
• The write-protect tab on the cassette is out (red) (p. 18).*
Fast flashing:
• The tape has run out (p. 18, 32).*
Moisture condensation has occurred*
Fast flashing:
• Eject the cassette, turn off your camcorder, and leave it for about 1 hour with the cassette compartment open (p. 91).
You need to eject the cassette
Slow flashing:
• The write-protect tab on the cassette is out (red) (p. 18).*
Fast flashing:
• Moisture condensation has occurred (p. 91).
• The tape has run out (p. 18, 32).*
• The self-diagnosis display function is activated (p. 83).
The lithium battery is weak or is not installed (p. 78)

Warning messages

CLEANING CASSETTE	The video heads are dirty.

* You hear the melody or beep sound.

Using your camcorder abroad

Using your camcorder abroad

You can use your camcorder in any country or area with the AC power adaptor supplied with your camcorder within 100 V to 240 V AC, 50/60 Hz.

Your camcorder is a PAL system based camcorder. If you want to view the playback picture on a TV, it must be a PAL system based TV with VIDEO/AUDIO input jack.
The following shows TV colour systems used overseas.

PAL system
Australia, Austria, Belgium, China, Czech Republic, Denmark, Finland, Germany, Great Britain, Holland, Hong Kong, Italy, Kuwait, Malaysia, New Zealand, Norway, Portugal, Singapore, Slovak Republic, Spain, Sweden, Switzerland, Thailand, etc.

PAL-M system
Brazil

PAL-N system
Argentina, Paraguay, Uruguay

NTSC system
Bahama Islands, Bolivia, Canada, Central America, Chile, Colombia, Ecuador, Jamaica, Japan, Korea, Mexico, Peru, Surinam, Taiwan, the Philippines, the U.S.A., Venezuela, etc.

SECAM system
Bulgaria, France, Guyana, Hungary, Iran, Iraq, Monaco, Poland, Russia, Ukraine, etc.

Simple setting of clock by time difference

You can easily set the clock to the local time by setting a time difference. Select WORLD TIME in the MENU settings. See page 64 for more information.

Использование Вашей видеокамеры за границей

Использование Вашей видеокамеры за границей

Вы можете использовать Вашу видеокамеру в любой стране или области с помощью сетевого адаптера переменного тока, прилагаемого к Вашей видеокамере, который можно использовать в пределах от 100 В до 240 В переменного тока с частотой 50/60 Гц.

Ваша видеокамера основана на системе PAL. Если Вы хотите просмотреть воспроизводимое изображение на телевизоре, то это должен быть телевизор, основанный на системе PAL, с входными гнездами VIDEO/AUDIO.
Ниже приведены системы цветного телевидения, используемые за рубежом.

Система PAL
Австралия, Австрия, Бельгия, Великобритания, Германия, Голландия, Гонконг, Дания, Испания, Италия, Китай, Кувейт, Малайзия, Новая Зеландия, Норвегия, Португалия, Сингапур, Словацкая Республика, Таиланд, Финляндия, Чешская Республика, Швейцария, Швеция и т.д.

Система PAL-M
Бразилия

Система PAL-N
Аргентина, Парагвай, Уругвай

Система NTSC
Багамские острова, Боливия, Венесуэла, Канада, Колумбия, Корея, Мексика, Перу, Суринам, США, Тайвань, Филиппины, Центральная Америка, Чили, Эквадор, Ямайка, Япония и т.д.

Система SECAM
Болгария, Венгрия, Гвиана, Ирак, Иран, Монако, Польша, Россия, Украина, Франция и т.д.

Простая установка разницы во времени на часах

Вы можете легко установить часы на местное время путем установки разницы во времени. Выберите команду WORLD TIME в установках MENU. Подробные сведения приведены на стр. 64

Maintenance information and precautions

Moisture condensation

If your camcorder is brought directly from a cold place to a warm place, moisture may condense inside your camcorder, on the surface of the tape, or on the lens. In this condition, the tape may stick to the head drum and be damaged or your camcorder may not operate correctly. If there is moisture inside your camcorder, the beep sounds and the indicator flashes. When the ⏏ indicator flashes at the same time, the cassette is inserted in your camcorder. If moisture condenses on the lens, the indicator will not appear.

If moisture condensation occurred
None of the functions except cassette ejection will work. Eject the cassette, turn off your camcorder, and leave it for about 1 hour with the cassette compartment open. Your camcorder can be used again if the indicator does not appear when the power is turned on again.

Note on moisture condensation
Moisture may condense when you bring your camcorder from a cold place into a warm place (or vice versa) or when you use your camcorder in a hot place as follows:
- You bring your camcorder from a ski slope into a place warmed up by a heating device
- You bring your camcorder from an air-conditioned car or room into a hot place outside
- You use your camcorder after a squall or a shower
- You use your camcorder in a high temperature and humidity place

How to prevent moisture condensation
When you bring your camcorder from a cold place into a warm place, put your camcorder in a plastic bag and tightly seal it. Remove the bag when the air temperature inside the plastic bag has reached the surrounding temperature (after about 1 hour).

Информация по уходу за аппаратом и меры предосторожности

Конденсация влаги

Если видеокамера принесена прямо из холодного места в теплое, то внутри видеокамеры, на поверхности ленты или на объективе может произойти конденсация влаги. В таком состоянии лента может прилипнуть к барабану головки и будет повреждена или же видеокамера не сможет работать надлежащим образом. Если внутри видеокамеры произошла конденсация влаги, то прозвучит зуммерный сигнал, а на экране ЖКД будет мигать индикатор . Если в то же самое время будет мигать индикатор ⏏, это значит, что в видеокамеру вставлена кассета. Если влага сконденсировалась на объективе, индикатор появляться не будет.

Если произошла конденсация влаги
Ни одна из функций, кроме выталкивания кассеты, не будет работать. Извлеките кассету, выключите видеокамеру и оставьте ее приблизительно на 1 час с открытым отсеком для кассеты. Если при повторном включении питания индикатор не появится на дисплее, Вы можете снова пользоваться видеокамерой.

Примечание по конденсации влаги
Влага может образоваться, если Вы принесете Вашу видеокамеру из холодного места в теплое (или наоборот) или когда Вы используете Вашу видеокамеру в жарком месте в следующих случаях:
- Вы принесли Вашу видеокамеру с лыжного склона в помещение, где функционирует обогреватель
- Вы принесли Вашу видеокамеру из автомобиля или из комнаты с воздушным кондиционированием в жаркое место на улице
- Вы используете видеокамеру после грозы или дождя
- Вы используете Вашу видеокамеру в очень жарком и влажном месте.

Как предотвратить конденсацию влаги
Если видеокамера принесена из холодного места в теплое, то положите видеокамеру в полиэтиленовый пакет и плотно заклейте его. Выньте видеокамеру из полиэтиленового пакета, когда температура воздуха внутри пакета достигнет температуры окружающего воздуха (приблизительно через 1 час).

Additional information/Дополнительная информация

Maintenance information

Cleaning the video head

To ensure normal recording and clear pictures, clean the video heads. The video head may be dirty when:

- The ⊗ indicator and "🧹 CLEANING CASSETTE" message appear one after another or the ⊗ indicator flashes in the viewfinder.
- Playback pictures contain noise.
- Playback pictures are hardly visible.
- Playback pictures do not appear.

If this happens, clean the video heads with the Sony V8-25CLH/V8-25CLD cleaning cassette (not supplied).

[a] → [b]

[a] Slightly dirty
[b] Very dirty

Note on video heads

When the playback pictures are still contain noise even if you have cleaned the video heads with a cleaning cassette, the video heads may have worn down due to long use. If this is the case, they must be replaced with new heads. Contact your Sony dealer or local authorized Sony service facility.

Информация по уходу за аппаратом

Чистка видеоголовок

Для обеспечения нормальной записи и четкого изображения следует периодически чистить видеоголовки. Видеоголовки возможно загрязнены, если:

- В видоискателе появляются один за другим индикатор ⊗ и сообщение "🧹 CLEANING CASSETTE" или же мигает индикатор ⊗.
- Воспроизводимое изображение содержит помехи.
- Воспроизводимое изображение с трудом различимо.
- Воспроизводимое изображение не появляется на экране.

Если это произошло, почистите видеоголовки с помощью очистительной кассеты Sony V8-25CLH/V8-25CLD (не прилагается).

[a] → [b]

[a] Слегка загрязнены
[b] Очень загрязнены

Примечание по видеоголовкам

Если воспроизводимое изображение все еще содержит помехи даже после того, как Вы почистили видеоголовки с помощью очистительной кассеты, то, возможно, видеоголовки уже износились вследствие длительной эксплуатации видеокамеры. В этом случае, их следует заменить на новые. Обратитесь в сервисный центр Sony или в местное уполномоченное предприятие по обслуживанию изделий Sony.

Removing dust from inside the viewfinder – CCD-TR913E only

(1) ①Remove the screw with a screwdriver (not supplied). ②Then, while sliding the RELEASE knob, ③turn the eyecup in the direction of the arrow and pull it out.
(2) Clean the surface with a commercially available blower for a still camera.
(3) Reattach the eyecup and replace the screw.

Caution

Do not remove any other screws. You may remove only the screw to remove the eyecup.

Precautions

Camcorder operation

- Operate your camcorder on 7.2 V (battery pack) or 8.4 V (AC power adaptor).
- For DC or AC operation, use the accessories recommended in this operating instructions.
- If any solid object or liquid get inside the casing, unplug your camcorder and have it checked by a Sony dealer before operating it any further.
- Avoid rough handling or mechanical shock. Be particularly careful of the lens.
- Keep the POWER switch set to OFF when you are not using your camcorder.
- Do not wrap your camcorder with a towel, for example, and operate it. Doing so might cause heat to build up inside.
- Keep your camcorder away from strong magnetic fields or mechanical vibration.

Удаление пыли изнутри видоискателя – Только модель CCD-TR913E

(1) ①Отвинтите винт с помощью отвертки (не прилагается). ②Затем, передвинув кнопку RELEASE, ③поверните окуляр в направлении стрелки и потяните его.
(2) Почистите поверхность с помощью воздуходувки для фотоаппаратов, которая приобретается отдельно.
(3) Прикрепите наглазник и завинтите винт обратно на место.

Внимание

Не отвинчивайте другие винты. Вы можете отвинчивать только винт для снятия окуляра.

Меры предосторожности

Эксплуатация видеокамеры

- Эксплуатируйте видеокамеру от 7,2 В (батарейный блок) или 8,4 В (сетевой адаптер переменного тока)
- Что касается эксплуатации видеокамеры от постоянного и переменного тока, используйте принадлежности, рекомендуемые в данной инструкции по эксплуатации.
- Если какой-нибудь твердый предмет или жидкость попали внутрь корпуса, то выключите видеокамеру и проверьте ее у дилера Sony перед дальнейшей ее эксплуатацией.
- Избегайте грубого обращения с видеокамерой или механических ударов. Будьте особенно осторожны с объективом.
- Если видеокамера не используется, держите выключатель POWER в положении OFF.
- Не заворачивайте Вашу видеокамеру, например, в полотенце, и не эксплуатируйте ее в таком состоянии. В противном случае может произойти повышение температуры внутри видеокамеры.
- Держите Вашу видеокамеру подальше от сильных магнитных полей или механической вибрации.

Built-in light

- Do not knock or jolt the built-in light while it is turned on as it may damage the bulb or shorten the life of the bulb.
- Do not leave the built-in light on while it is resting on or against something; it may cause a fire or damage the built-in light.

On handling tapes

Do not insert anything into the small holes on the rear of the cassette. These holes are used to sense the type and thickness of the tape and if the recording tab is in or out.

Camcorder care

- When your camcorder is not to be used for a long time, remove the tape and battery. Periodically turn on the power, operate the CAMERA and PLAYER sections and play back a tape for about 3 minutes.
- Clean the lens with a soft brush to remove dust. If there are fingerprints on the lens, remove them with a soft cloth.
- Clean the camcorder body with a dry soft cloth, or a soft cloth lightly moistened with a mild detergent solution. Do not use any type of solvent which may damage the finish.
- Do not let sand get into your camcorder. When you use your camcorder on a sandy beach or in a dusty place, protect it from the sand or dust. Sand or dust may cause your camcorder to malfunction, and sometimes this malfunction cannot be repaired.

AC power adaptor

- Unplug the unit from the mains when you are not using the unit for a long time. To disconnect the mains lead, pull it out by the plug. Never pull the mains lead itself.
- Do not operate the unit with a damaged cord or if the unit has been dropped or damaged.
- Do not bend the mains lead forcibly, or place a heavy object on it. This will damage the cord and may cause fire or electrical shock.

Встроенная подсветка

- Не стучите по устройству подсветки и не трясите его в то время, когда оно включено, поскольку это может повредить лампу накаливания или сократить ее срок службы.
- Не оставляйте встроенную подсветку включенной в то время, когда она на чем-то лежит или направлена на какой-либо предмет.

Относительно обращения с лентами

Не вставляйте ничего в маленькие отверстия на задней стороне кассеты. Эти отверстия используются для определения типа и толщины ленты, а также для определения наличия или отсутствия лепестка защиты записи на ленте.

Уход за видеокамерой

- Если Ваша видеокамера не будет использоваться в течение длительного периода времени, выньте ленту и батарейный блок. Периодически включайте питание, оперируйте устройствами CAMERA и PLAYER и воспроизводите ленту порядка 3-х минут.
- Чистите объектив с помощью мягкой кисточки для удаления пыли. Если имеются отпечатки пальцев на объективе, то удалите их с помощью мягкой ткани.
- Чистите корпус видеокамеры с помощью сухой мягкой ткани или мягкой ткани, слегка смоченной раствором умеренного моющего средства. Не используйте каких-либо типов растворителей, которые могут повредить отделку.
- Не допускайте попадания песка в видеокамеру. Если Вы используете видеокамеру на песчаном пляже или в каком-либо пыльном месте, предохраните аппарат от песка или пыли. Песок или пыль могут привести к неисправности аппарата, которая иногда может быть неисправимой.

Сетевой адаптер переменного тока

- Отсоедините аппарат от электрической сети, если он не используется длительное время. Для отсоединения сетевого шнура потяните его за разъем. Никогда не тяните за сам шнур.
- Не эксплуатируйте аппарат с поврежденным шнуром или же в случае, если аппарат упал или был поврежден.
- Не сгибайте сетевой провод силой и не ставьте на него тяжелые предметы. Это повредит провод и может привести к пожару или поражению электрическим током.

- Prevent metallic objects from coming into contact with the metal parts of the connecting section. If this happens, a short may occur and the unit may be damaged.
- Always keep metal contacts clean.
- Do not disassemble the unit.
- Do not apply mechanical shock or drop the unit.
- While the unit is in use, particularly during charging, keep it away from AM receivers and video equipment. AM receivers and video equipment disturb AM reception and video operation.
- The unit becomes warm during use. This is not a malfunction.
- Do not place the unit in locations that are:
  – Extremely hot or cold
  – Dusty or dirty
  – Very humid
  – Vibrating

Notes on dry batteries

To avoid possible damage from battery leakage or corrosion, observe the following:

- Be sure to insert the batteries with the + – polarities matched to the + – marks.
- Dry batteries are not rechargeable.
- Do not use a combination of new and old batteries.
- Do not use different types of batteries.
- Current flows from batteries when you are not using them for a long time.
- Do not use leaking batteries.

If batteries are leaking

- Wipe off the liquid in the battery compartment carefully before replacing the batteries.
- If you touch the liquid, wash it off with water.
- If the liquid get into your eyes, wash your eyes with a lot of water and then consult a doctor.

If any problem occurs, unplug your camcorder and contact your nearest Sony dealer.

- Будьте осторожны, чтобы никакие металлические предметы не соприкасались с металлическими контактами соединительной секции. Если это случится, то может произойти короткое замыкание, и аппарат может быть поврежден.
- Всегда поддерживайте металлические контакты в чистоте.
- Не разбирайте аппарат.
- Не подвергайте аппарат механической вибрации и не роняйте его.
- При использовании аппарата, особенно во время зарядки, держите его подальше от приемников АМ-радиовещания и видеоаппаратуры. Приемники АМ-радиовещания и видеоаппаратура нарушают АМ-радиоприем и работу видеоаппаратуры.
- В процессе эксплуатации аппарат нагревается. Это является вполне нормальным.
- Не размещайте аппарат в местах:
  – Чрезмерно жарких или холодных
  – Пыльных или грязных
  – Очень влажных
  – Подверженных вибрации

Примечание к сухим батарейкам

Во избежание возможного повреждения видеокамеры вследствие утечки внутреннего вещества батареек или коррозии соблюдайте следующее:

- При установке батареек соблюдайте правильную полярность + – в соответствии с метками + –.
- Сухие батарейки нельзя перезаряжать.
- Не используйте новые батарейки вместе со старыми.
- Не используйте батарейки разного типа.
- Если батарейки не используются длительное время, они постепенно разряжаются.
- Не используйте батарейки, которые потекли.

Если произошла утечка внутреннего вещества батареек

- Перед тем, как заменить батарейки, тщательно протрите остатки жидкости в отсеке для батареек.
- В случае попадания жидкости на кожу, промойте жидкость водой.
- В случае попадания жидкости в глаза, промойте свои глаза большим количеством воды, после чего обратитесь к врачу.

В случае возникновения каких-либо проблем, отключите Вашу видеокамеру от источника питания и обратитесь в ближайший сервисный центр Sony.

— Quick Reference —

Identifying the parts and controls

— Оперативный справочник —

Обозначение частей и регуляторов

Camcorder/Видеокамера

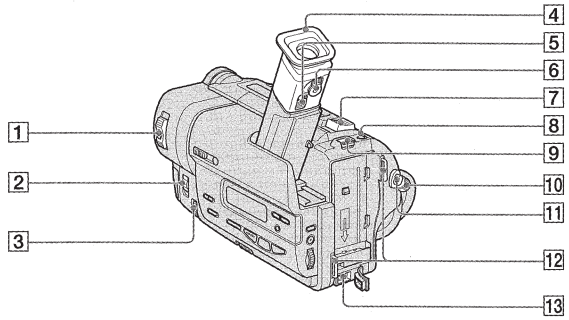

1 **POWER switch** (p. 19)
2 **FOCUS switch** (p. 51)
3 **NEAR/FAR dial** (p. 51)
4 **Eyecup**
5 **Eyecup RELEASE knob** (CCD-TR913E only) (p. 93)
6 **Viewfinder lens adjustment lever** (p. 21)
7 **Power zoom lever** (p. 22)
8 **PHOTO button** (p. 35)
9 **BATT RELEASE lever** (p. 12)
10 **STANDBY switch** (p. 19)
11 **START/STOP button** (p. 19)
12 **Hook for shoulder strap**
13 **DC IN jack** (p. 13, 17)

This mark indicates that this product is a genuine accessory for Sony video products.
When purchasing Sony video products, Sony recommends that you purchase accessories with this "GENUINE VIDEO ACCESSORIES" mark.

1 **Переключатель POWER** (стр. 19)
2 **Переключатель FOCUS** (стр. 51)
3 **Диск NEAR/FAR** (стр. 51)
4 **Окуляр**
5 **Кнопка окуляра RELEASE** (только модель CCD-TR913E) (стр. 93)
6 **Рычаг регулировки объектива видоискателя** (стр. 21)
7 **Рычаг приводного вариообъектива** (стр. 22)
8 **Кнопка PHOTO** (стр. 35)
9 **Рычаг BATT RELEASE** (стр. 12)
10 **Переключатель STANDBY** (стр. 19)
11 **Кнопка START/STOP** (стр. 19)
12 **Крючок для плечевого ремня**
13 **Гнездо DC IN** (стр. 13, 17)

Данный знак означает, что это изделие является подлинной принадлежностью для видеоаппаратуры Sony. При покупке видеоаппаратуры Sony рекомендуется приобретать для нее принадлежности Sony с таким знаком "GENUINE VIDEO ACCESSORIES".

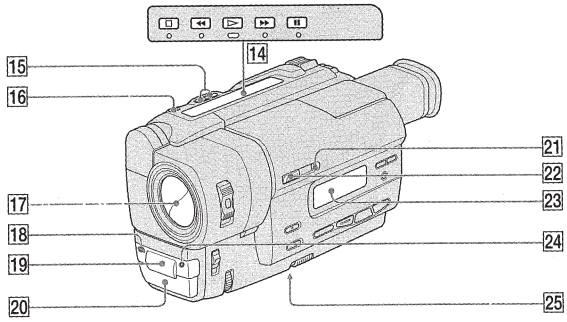

14 **Video control buttons** (p. 32, 33)
■ STOP (stop)
◀◀ REW (rewind)
► PLAY (playback)
▶▶ FF (fastforward)
❚❚ PAUSE (pause)
The control buttons light up when you set the POWER switch to PLAYER.
15 **EDITSEARCH button** (p. 28)
16 **LASER LINK button** (p. 31)
17 **Lens cover**
18 **Camera recording lamp** (p. 19)
19 **Infrared rays emitter** (p. 25, 31)
20 **Microphone**
21 **+SLOW SHUTTER** (p. 25)
22 **NIGHTSHOT switch** (p. 25)
23 **Display window** (p. 105)
24 **Remote sensor** (p. 103)
25 **Tripod receptacle** (base)
Make sure that the length of the tripod screw is less than 6.5 mm (9/32 inch). Otherwise, you cannot attach the tripod securely and the screw may damage your camcorder.

14 **Кнопки видеоконтроля** (стр. 32, 33)
■ STOP (остановка)
◀◀ REW (ускоренная перемотка назад)
► PLAY (воспроизведение)
▶▶ FF (ускоренная перемотка вперед)
❚❚ PAUSE (пауза)
Кнопки видеоконтроля высвечиваются при устанавливке переключателя POWER в положение PLAYER.
15 **Кнопка EDITSEARCH** (стр. 28)
16 **Кнопка LASER LINK** (стр. 31)
17 **Крышка объектива**
18 **Лампочка записи видеокамеры** (стр. 19)
19 **Излучатель инфракрасных лучей** (стр. 25, 31)
20 **Микрофон**
21 **Кнопка +SLOW SHUTTER** (стр. 25)
22 **Переключатель NIGHTSHOT** (стр. 25)
23 **Окошко дисплея** (стр. 105)
24 **Датчик дистанционного управления** (стр. 103)
25 **Гнездо для треноги** (основание)
Убедитесь, что длина винта треноги менее 6,5 мм. В противном случае Вы не сможете надежно прикрепить треногу, а винт может повредить Вашу видеокамеру.

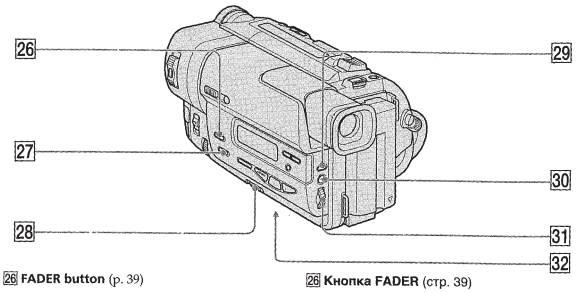

26 **FADER button** (p. 39)
27 **BACK LIGHT button** (p. 24)
28 **START/STOP MODE switch** (p. 23)
29 **EXPOSURE button** (p. 50)
30 **MENU button** (p. 37, 64)
31 **SEL/PUSH EXEC dial** (p. 35)
32 **Lithium battery compartment** (p. 79)

What is LASER LINK?
The LASER LINK system sends and receives pictures and sound between video equipment having the mark by using infrared rays.

Attaching the shoulder strap
Attach the shoulder strap supplied with your camcorder to the hooks for the shoulder strap.

26 **Кнопка FADER** (стр. 39)
27 **Кнопка BACK LIGHT** (стр. 24)
28 **Переключатель START/STOP MODE** (стр. 23)
29 **Кнопка EXPOSURE** (стр. 50)
30 **Кнопка MENU** (стр. 37, 64)
31 **Диск SEL/PUSH EXEC** (стр. 35)
32 **Отсек для литиевой батарейки** (стр. 79)

Что такое LASER LINK?
Система LASER LINK посылает и принимает сигналы изображения и звука между видеоаппаратурой, имеющей знак , с помощью инфракрасных лучей.

Прикрепление плечевого ремня
Прикрепите плечевой ремень, прилагаемый к Вашей видеокамере, к крючкам для плечевого ремня.

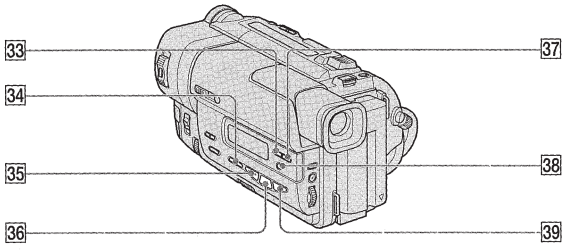

33 **DATE button** (p. 27)
34 **TITLE button** (p. 53)
35 **DIGITAL EFFECT button** (p. 44)
36 **PROGRAM AE button** (p. 47)
37 **TIME button** (p. 27)
38 **COUNTER RESET button** (p. 20)
39 **PICTURE EFFECT button** (p. 42)

Fastening the grip strap

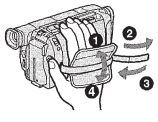

Fasten the grip strap firmly.

33 **Кнопка DATE** (стр. 27)
34 **Кнопка TITLE** (стр. 53)
35 **Кнопка DIGITAL EFFECT** (стр. 44)
36 **Кнопка PROGRAM AE** (стр. 47)
37 **Кнопка TIME** (стр. 27)
38 **Кнопка COUNTER RESET** (стр. 20)
39 **Кнопка PICTURE EFFECT** (стр. 42)

Пристегивание ремня для захвата

Пристегните ремень для захвата надежно.

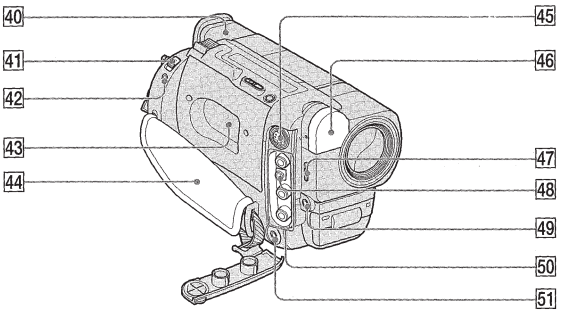

40 **Viewfinder** (p. 21)

41 **EJECT switch** (p. 18)

42 **LANC control jack**
LANC stands for Local Application Control Bus System. The control jack is used for controlling the tape transport of video equipment and other peripherals connected to the video equipment. This jack has the same function as the jack indicated as CONTROL L or REMOTE.

43 **Cassette compartment** (p. 18)

44 **Grip strap**

45 **S VIDEO jack** (p. 29)

46 **Built-in light** (p. 57)

47 **LIGHT switch** (p. 57)

48 **RFU DC OUT (RFU adaptor DC output) jack** (p. 30)

49 **MIC jack (PLUG IN POWER)**
Connect an external microphone (not supplied). This jack also accepts a "plug-in-power" microphone.
If you connect a 2-pin microphone, supply power from DC OUT jack.
In this case, WIND in the MENU settings does not function.

50 **VIDEO/AUDIO jacks** (p. 29)

51 **(headphones) jack**

40 **Видоискатель** (стр. 21)

41 **Выключатель EJECT** (стр. 18)

42 **Гнездо управления LANC**
LANC означает систему канала местного управления. Гнездо управления используется для контроля за перемещением ленты видеоаппаратуры и периферийных устройств, подключенных к ней. Данное гнездо имеет такую же функцию, как и разъемы, обозначенные как CONTROL L или REMOTE.

43 **Кассетный отсек** (стр. 18)

44 **Ремень для захвата**

45 **Гнездо S VIDEO** (стр. 29)

46 **Встроенная подсветка** (p. 57)

47 **Выключатель LIGHT** (p. 57)

48 **Гнездо RFU DC OUT (выход пост. тока ВЧ-адаптера)** (стр. 30)

49 **Гнездо MIC (PLUG IN POWER)**
Для подсоединения внешнего микрофона (не прилагается). Это гнездо также позволяет подключить микрофон "с выключателем питания". При подсоединении 2-штырькового микрофона, подвод питания следует выполнять через гнездо DC OUT.
В этом случае функция WIND в установках MENU не работает.

50 **Гнезда VIDEO/AUDIO** (стр. 29)

51 **Гнездо (головные телефоны)**

Remote Commander

Пульт дистанционного управления

The buttons that have the same name on the Remote Commander as on your camcorder function identically to the buttons on your camcorder.

Кнопки пульта дистанционного управления, которые имеют одинаковые наименования с кнопками на видеокамере, функционируют идентично.

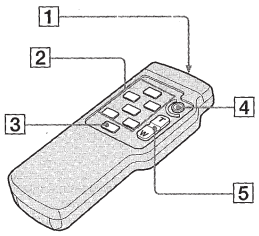

1 **Transmitter**

2 **Video control buttons** (p. 32)

3 **DISPLAY button** (p. 33)

4 **START/STOP button** (p. 19)
You use it in the standby or recording mode.

5 **Power zoom button** (p. 22)

1 **Передатчик**

2 **Кнопки видеоконтроля** (стр. 32)

3 **Кнопка DISPLAY** (стр. 33)

4 **Кнопка START/STOP** (стр. 19)
Эта кнопка используется в режиме ожидания или записи.

5 **Кнопка приводного вариообъектива** (стр. 22)

To prepare the Remote Commander

Insert 2 R6 (size AA) batteries by matching the + and – polarities on the batteries to the + – marks inside the battery compartment.

Для подготовки пульта дистанционного управления

Вставьте 2 батарейки R6 (размера AA), соблюдая надлежащую полярность + и – на батарейках со знаками + – внутри отсека для батареек.

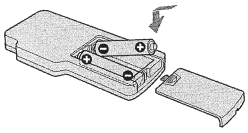

Notes on the Remote Commander

- Point the remote sensor away from strong light sources such as direct sunlight or overhead lighting. Otherwise, the Remote Commander may not function properly.
- Your camcorder works in the commander mode VTR 2. Commander modes 1, 2 and 3 are used to distinguish your camcorder from other Sony VCRs to avoid remote control misoperation. If you use another Sony VCR in the commander mode VTR 2, we recommend changing the commander mode or covering the sensor of the VCR with black paper.

Примечания к пульту дистанционного управления

- Держите дистанционный датчик подальше от сильных источников света, как например, прямые солнечные лучи или иллюминация. В противном случае дистанционное управление может не действовать.
- Данная видеокамера работает в режиме пульта дистанционного управления VTR2. Режимы пульта дистанционного управления 1, 2 и 3 используются для отличия данной видеокамеры от других KBM фирмы Sony во избежание неправильной работы дистанционного управления. Если Вы используете другой KBM фирмы Sony, работающий в режиме VTR2, мы рекомендуем Вам изменить режим пульта дистанционного управления или закрыть дистанционный датчик KBM черной бумагой.

Operation indicators

Рабочие индикаторы

Viewfinder/Видоискатель

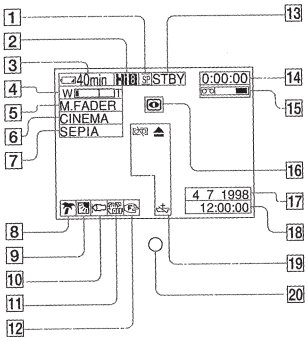

Display window/Окошко дисплея

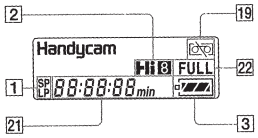

1 **Recording mode indicator** (p. 67)

2 **Hi8 format indicator** (p. 24, 75)

3 **Remaining battery time indicator** (p. 24)

4 **Exposure indicator** (p. 50)/**Zoom indicator** (p. 22)

5 **Fader indicator** (p. 40)/**Digital effect indicator** (p. 45)

6 **Wide mode indicator** (p. 37)

7 **Picture effect indicator** (p. 43)

8 **PROGRAM AE indicator** (p. 48)

9 **Backlight indicator** (p. 24)

10 **Wind indicator** (p. 65)

11 **SteadyShot off indicator** (p. 65)

12 **Manual focusing indicator** (p. 51)

13 **Video control mode** (p. 33)

1 **Индикатор режима записи** (стр. 71)

2 **Индикатор формата Hi8** (стр. 24, 75)

3 **Индикатор оставшегося заряда батарейного блока** (стр. 24)

4 **Индикатор экспозиции** (стр. 50)/**индикатор вариообъектива** (стр. 22)

5 **Индикатор фейдера** (стр. 40)/**индикатор цифрового эффекта** (стр. 45)

6 **Индикатор широкоформатного режима** (стр. 37)

7 **Индикатор эффекта изображения** (стр. 43)

8 **Индикатор PROGRAM AE** (стр. 48)

9 **Индикатор задней подсветки** (стр. 24)

10 **Индикатор ветрового фильтра** (стр. 69)

11 **Индикатор выключенной устойчивой съемки** (стр. 69)

12 **Индикатор ручной фокусировки** (стр. 51)

13 **Режим видеоконтроля** (стр. 33)

Identifying the parts and controls

14 **Tape counter** (p. 24)**/Self-diagnosis display function indicator** (p. 83)**/5SEC mode indicator** (p. 23)**/Photo mode indicator** (p. 35)

15 **Remaining tape indicator** (p. 24)

16 **NIGHTSHOT indicator** (p. 25)

17 **AUTO DATE indicator** (p. 74)**/Date indicator** (p. 27, 73)

18 **Time indicator** (p. 27, 73)

19 **Warning indicators** (p. 84)

20 **Recording lamp** (CCD-TR913E only) (p. 19)

21 **Date or time indicator** (p. 27, 73)**/Tape counter indicator** (p. 24)**/Self-diagnosis display function indicator** (p. 83)**/Remaining battery time indicator** (p. 13)

22 **FULL charge indicator** (p. 13)

Обозначение частей и регуляторов

14 **Индикатор счетчика ленты** (стр. 24)**/индикатор функции самодиагностики** (стр. 88)**/индикатор режима 5SEC** (стр. 23)**/индикатор фоторежима** (стр. 35)

15 **Индикатор оставшейся ленты** (стр. 24)

16 **Индикатор NIGHTSHOT** (стр. 25)

17 **Индикатор AUTO DATE** (стр. 74)**/индикатор даты** (стр. 27, 73)

18 **Индикатор времени** (стр. 27, 73)

19 **Предупреждающие индикаторы** (стр. 89)

20 **Лампочка записи** (только модель CCD-TR913E) (стр. 19)

21 **Индикатор даты или времени** (стр. 27, 73)**/индикатор счетчика ленты** (стр. 24)**/индикатор функции самодиагностики** (стр. 88)**/индикатор времени оставшегося заряда батарейного блока** (стр. 13)

22 **Индикатор зарядки FULL** (стр. 13)

English

Quick Function Guide

Functions to adjust exposure (in the recording mode)

• In a dark place	NIGHTSHOT (p. 25)
• In insufficient light	Low lux mode (p. 47)
• In dark environments such as sunset, fireworks, or general night views	Sunset & moon mode (p. 47)
• Shooting backlit subjects	BACK LIGHT (p. 24)
• In spotlight, such as at the theatre or a formal event	Spotlight mode (p. 47)
• In strong light or reflected light, such as at a beach in midsummer or on a ski slope	Beach & ski mode (p. 47)

Functions to give images more impact (in the recording mode)

• Smooth transition between scenes	FADER (p. 39)
• Taking a still picture	PHOTO (p. 35)
• Digital processing of images	PICTURE EFFECT (p. 42)
• Processing a scene using digital effects	DIGITAL EFFECT (p. 44)
• Creating a soft background for subjects	Soft portrait mode (p. 47)
• Superimposing a title	TITLE (p. 53)

Functions to give a natural appearance to your recordings (in the recording mode)

• Preventing deterioration of picture quality in digital zoom	D ZOOM [MENU] (p. 64)
• Focusing manually	Manual focus (p. 51)
• Reducing wind noise	WIND [MENU] (p. 64)
• Shooting distant subjects	Landscape mode (p. 47)
• Recording fast-moving subjects	Sports lesson mode (p. 47)

Functions to use in editing (in the recording mode)

• Watching the picture on a wide-screen TV	Wide mode (p. 37)
• Playing back the picture on a TV without connecting a cord	LASER LINK (p. 31)
• Recording with the date/time	Date and time (p. 27)
• Enhancing old tapes	ORC [MENU] (p. 64)

Functions to use after recording (in the playback mode)

• Playing back on monaural sound or sub sound	HiFi SOUND [MENU] (p. 64)
• Correcting jitter	TBC [MENU] (p. 64)
• Correcting colour noise	DNR [MENU] (p. 64)

SECTION 2
DISASSEMBLY

The following flow chart shows the disassembly procedure.

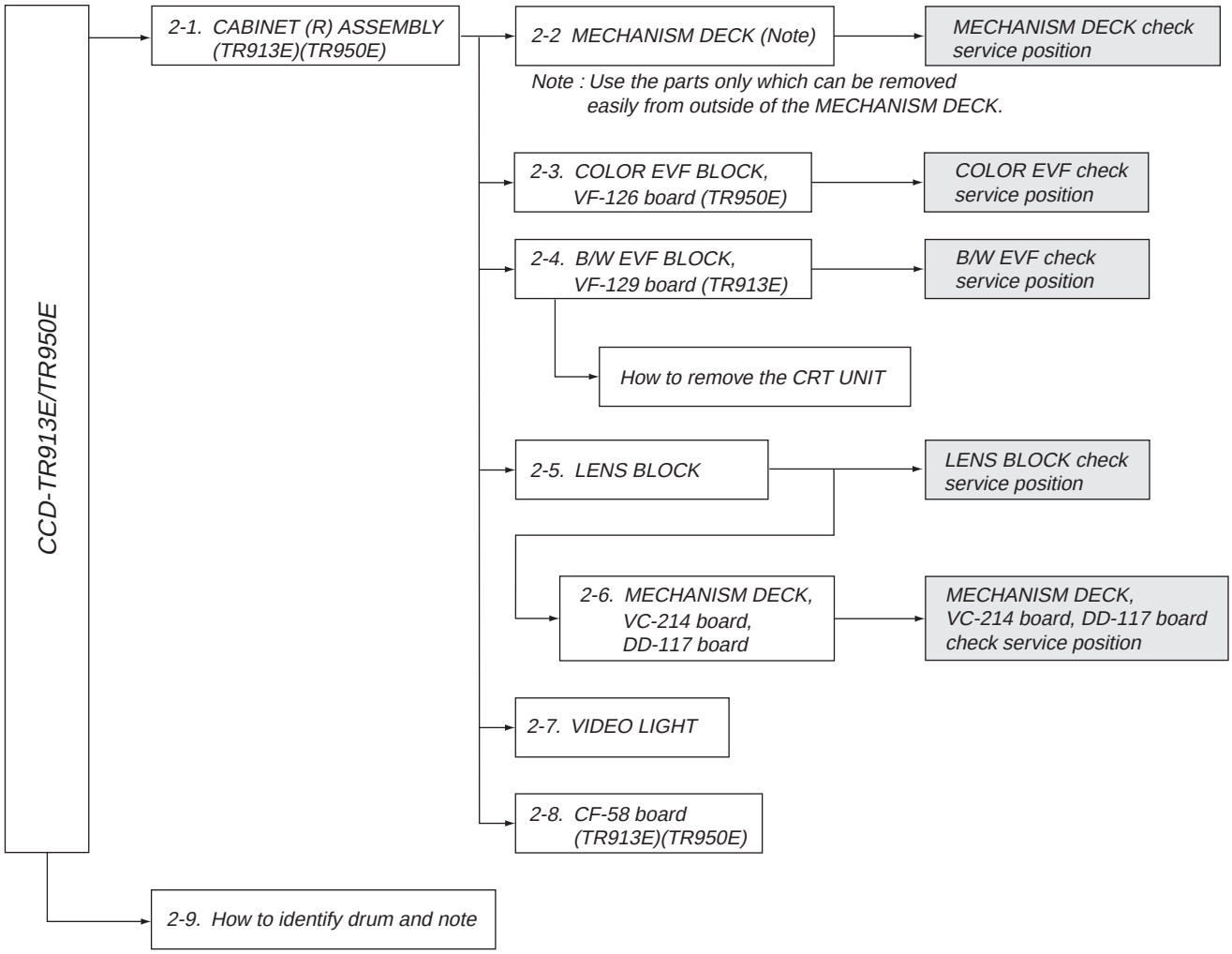
CCD-TR913E/TR950E
2-1. CABINET (R) ASSEMBLY (TR913E)(TR950E)
2-2 MECHANISM DECK (Note)
MECHANISM DECK check service position
Note : Use the parts only which can be removed easily from outside of the MECHANISM DECK.
2-3. COLOR EVF BLOCK, VF-126 board (TR950E)
COLOR EVF check service position
2-4. B/W EVF BLOCK, VF-129 board (TR913E)
B/W EVF check service position
How to remove the CRT UNIT
2-5. LENS BLOCK
LENS BLOCK check service position
2-6. MECHANISM DECK, VC-214 board, DD-117 board
MECHANISM DECK, VC-214 board, DD-117 board check service position
2-7. VIDEO LIGHT
2-8. CF-58 board (TR913E)(TR950E)
2-9. How to identify drum and note

NOTE: Follow the disassembly procedure in the numerical order given.

2-1. CABINET (R) ASSEMBLY (TR913E)

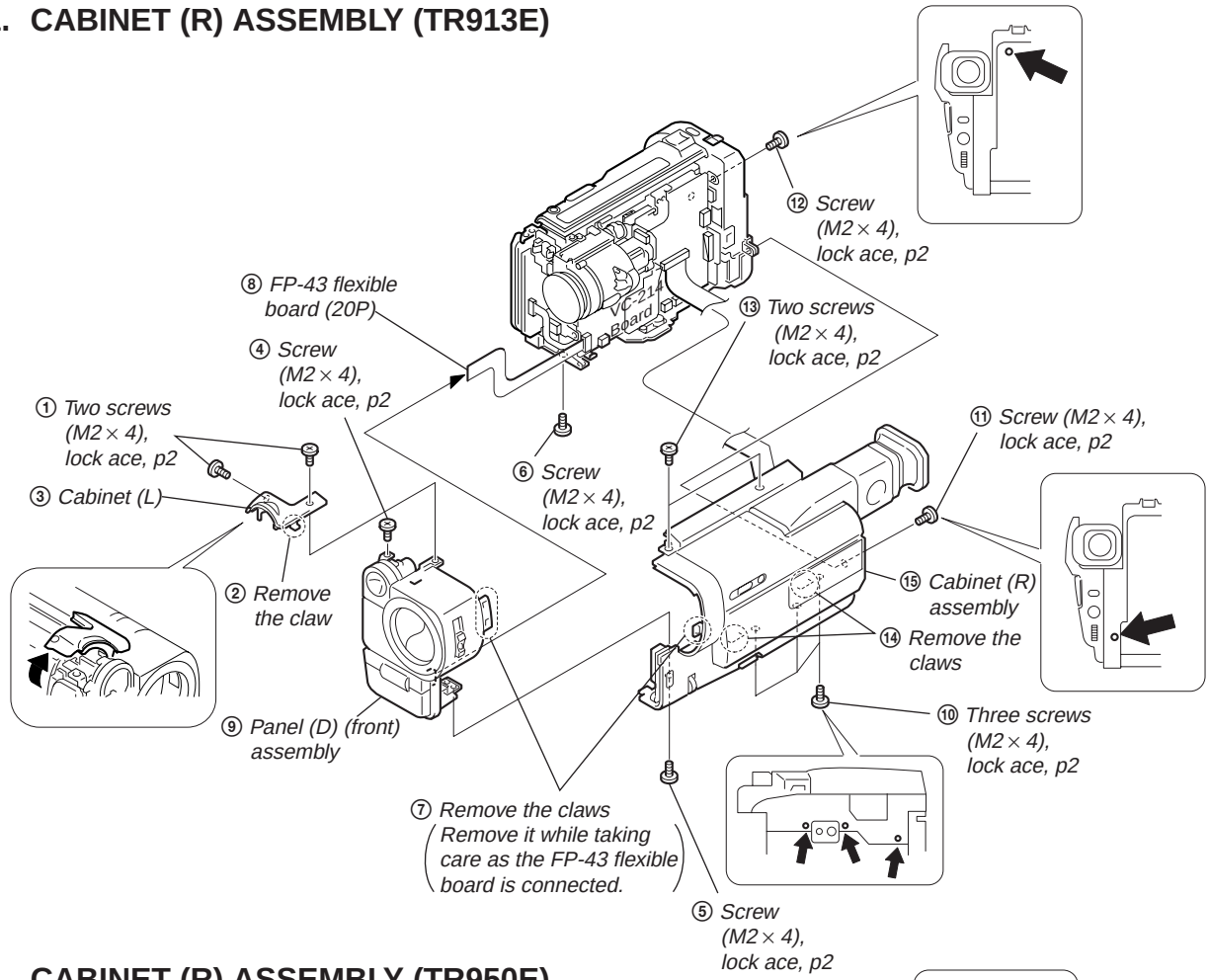
⑫ Screw (M2 × 4), lock ace, p2
⑧ FP-43 flexible board (20P)
④ Screw (M2 × 4), lock ace, p2
⑬ Two screws (M2 × 4), lock ace, p2
① Two screws (M2 × 4), lock ace, p2
⑥ Screw (M2 × 4), lock ace, p2
⑪ Screw (M2 × 4), lock ace, p2
③ Cabinet (L)
② Remove the claw
⑮ Cabinet (R) assembly
⑭ Remove the claws
⑩ Three screws (M2 × 4), lock ace, p2
⑨ Panel (D) (front) assembly
⑦ Remove the claws Remove it while taking care as the FP-43 flexible board is connected.
⑤ Screw (M2 × 4), lock ace, p2

CABINET (R) ASSEMBLY (TR950E)

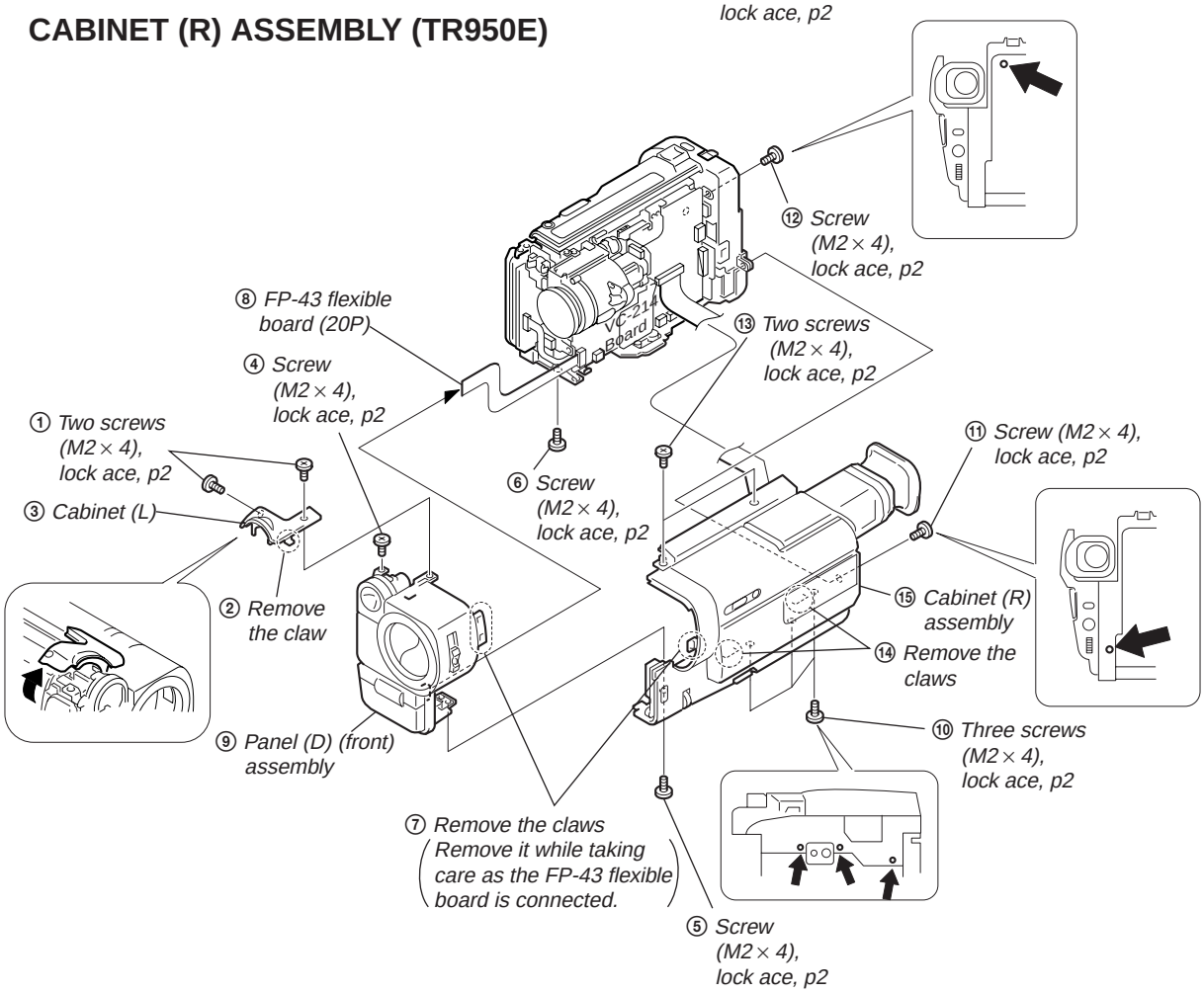
⑫ Screw (M2 × 4), lock ace, p2
⑧ FP-43 flexible board (20P)
④ Screw (M2 × 4), lock ace, p2
⑬ Two screws (M2 × 4), lock ace, p2
① Two screws (M2 × 4), lock ace, p2
⑥ Screw (M2 × 4), lock ace, p2
⑪ Screw (M2 × 4), lock ace, p2
③ Cabinet (L)
② Remove the claw
⑮ Cabinet (R) assembly
⑭ Remove the claws
⑩ Three screws (M2 × 4), lock ace, p2
⑨ Panel (D) (front) assembly
⑦ Remove the claws Remove it while taking care as the FP-43 flexible board is connected.
⑤ Screw (M2 × 4), lock ace, p2

2-2. MECHANISM DECK

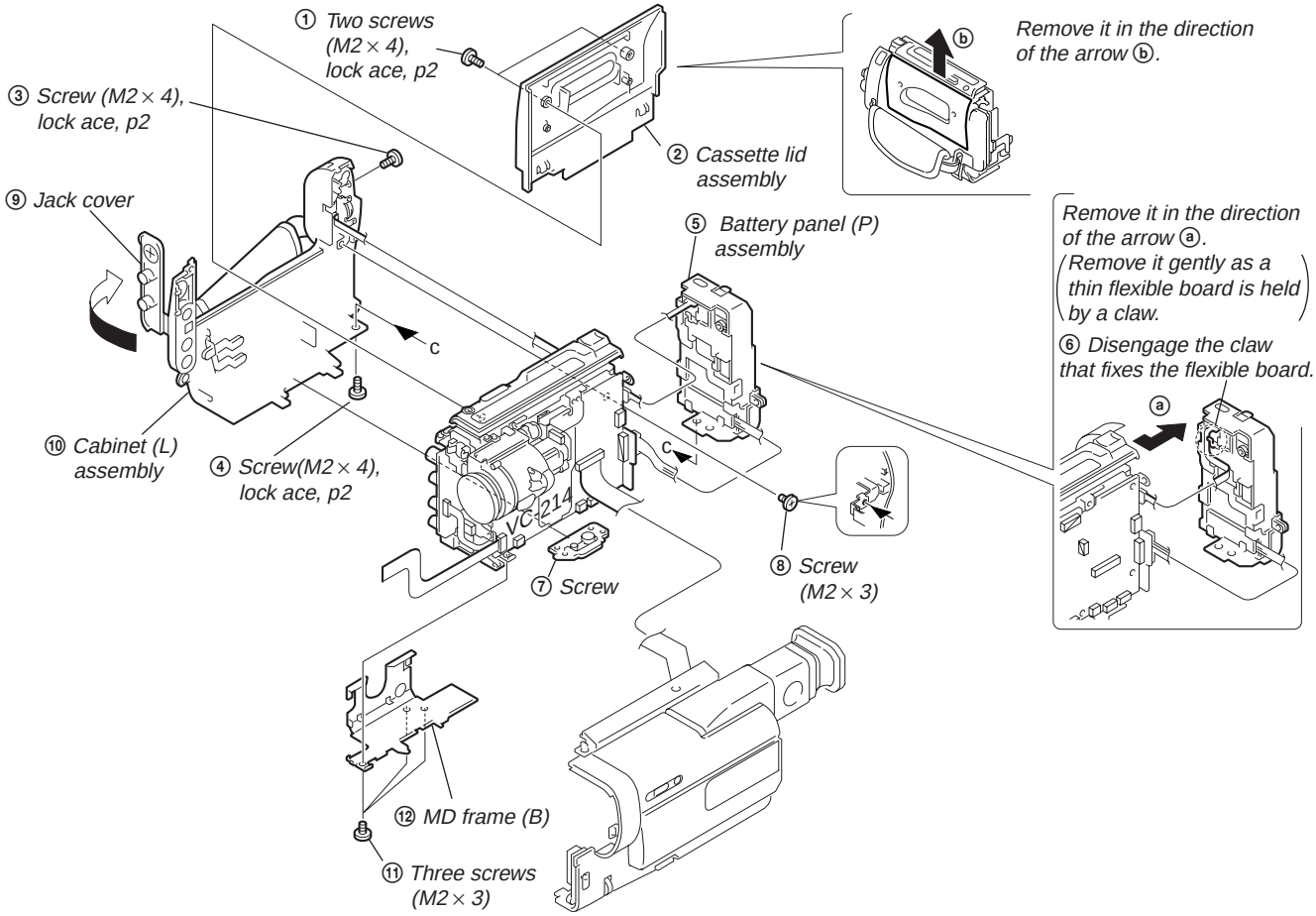
① Two screws (M2 × 4), lock ace, p2
③ Screw (M2 × 4), lock ace, p2
② Cassette lid assembly
ⓑ
Remove it in the direction of the arrow ⓑ.
⑨ Jack cover
⑤ Battery panel (P) assembly
Remove it in the direction of the arrow ⓐ.
(Remove it gently as a thin flexible board is held by a claw.)
⑥ Disengage the claw that fixes the flexible board.
ⓐ
c
c
⑩ Cabinet (L) assembly
④ Screw(M2 × 4), lock ace, p2
VC-214
⑦ Screw
⑧ Screw (M2 × 3)
⑫ MD frame (B)
⑪ Three screws (M2 × 3)

[MECHANISM DECK CHECK SERVICE POSITION]

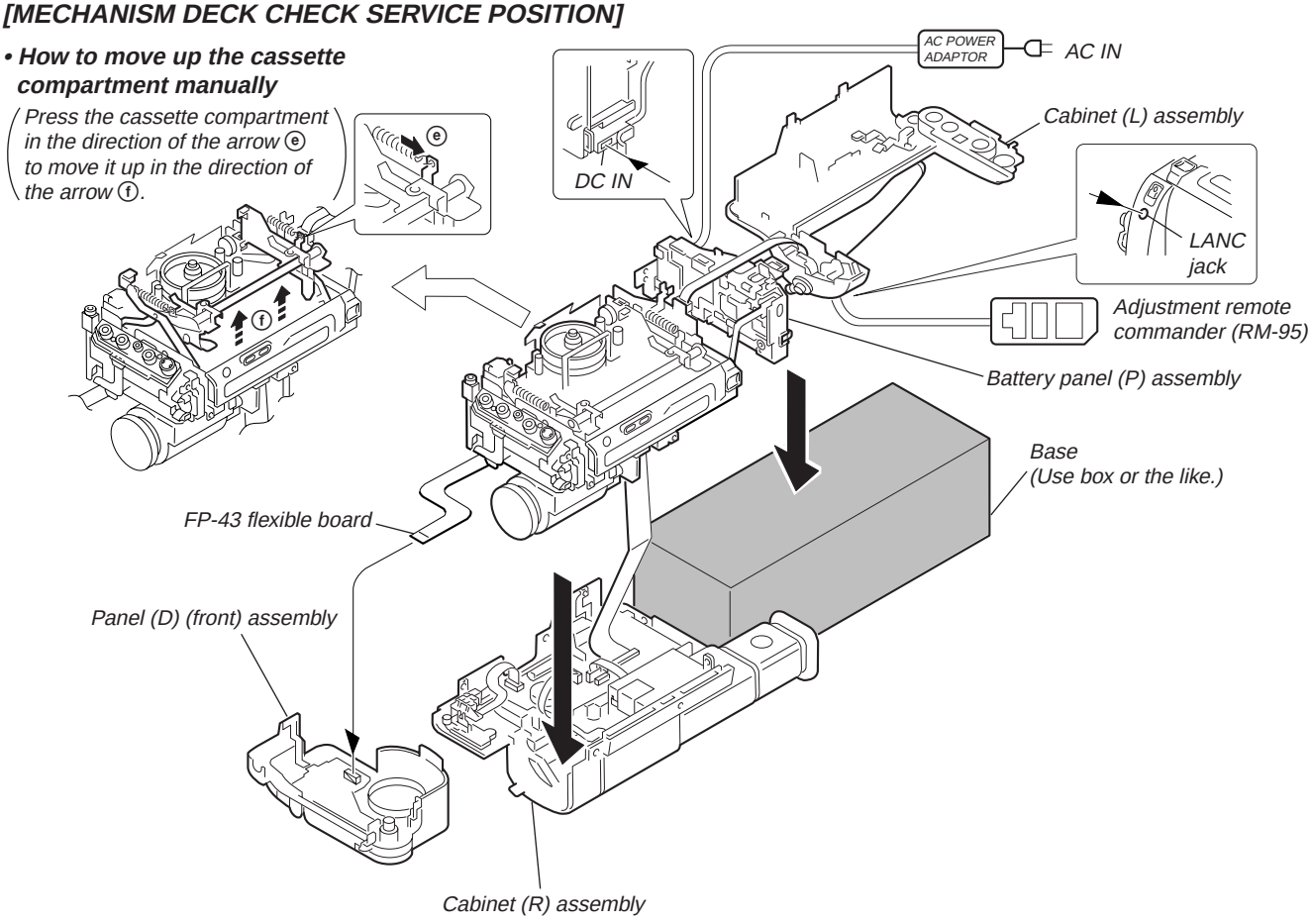
• How to move up the cassette compartment manually
(Press the cassette compartment in the direction of the arrow ⓔ to move it up in the direction of the arrow ⓕ.)
ⓔ
ⓕ
AC POWER ADAPTOR
AC IN
DC IN
Cabinet (L) assembly
LANC jack
Adjustment remote commander (RM-95)
Battery panel (P) assembly
Base
(Use box or the like.)
FP-43 flexible board
Panel (D) (front) assembly
Cabinet (R) assembly

2-3. COLOR EVF BLOCK, VF-126 BOARD (TR950E)

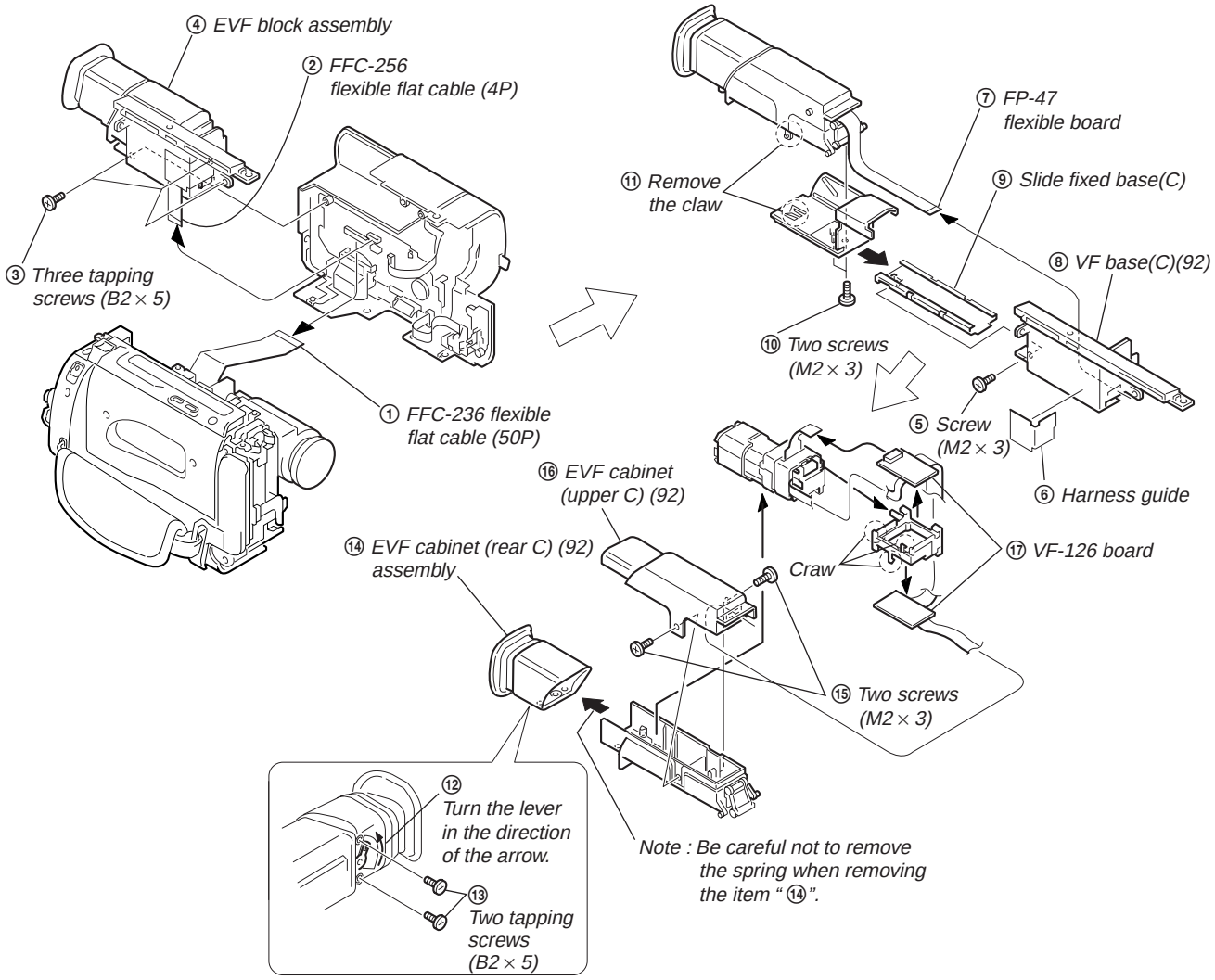
④ EVF block assembly
② FFC-256 flexible flat cable (4P)
③ Three tapping screws (B2 × 5)
① FFC-236 flexible flat cable (50P)
⑦ FP-47 flexible board
⑪ Remove the claw
⑨ Slide fixed base(C)
⑧ VF base(C)(92)
⑩ Two screws (M2 × 3)
⑤ Screw (M2 × 3)
⑥ Harness guide
⑯ EVF cabinet (upper C) (92)
⑰ VF-126 board
Craw
⑭ EVF cabinet (rear C) (92) assembly
⑮ Two screws (M2 × 3)
⑫ Turn the lever in the direction of the arrow.
⑬ Two tapping screws (B2 × 5)
Note : Be careful not to remove the spring when removing the item "⑭".

[COLOR EVF CHECK SERVICE POSITION]

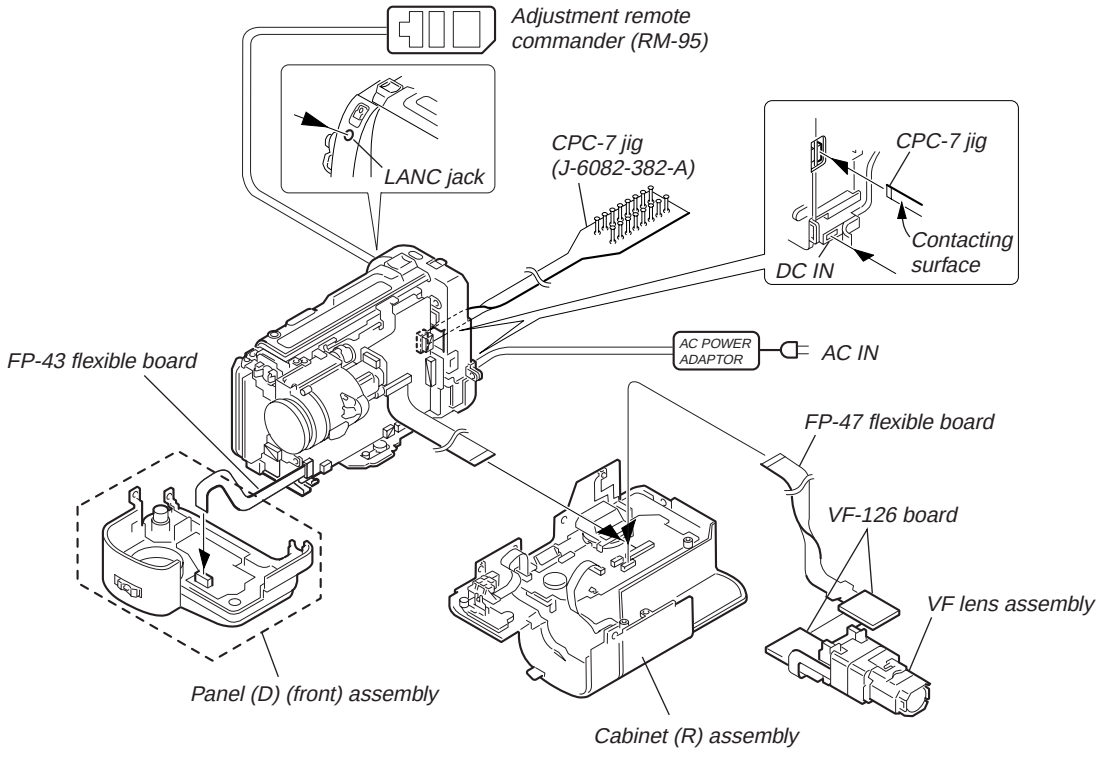

2-4. B/W EVF BLOCK, VF-129 BOARD (TR913E)

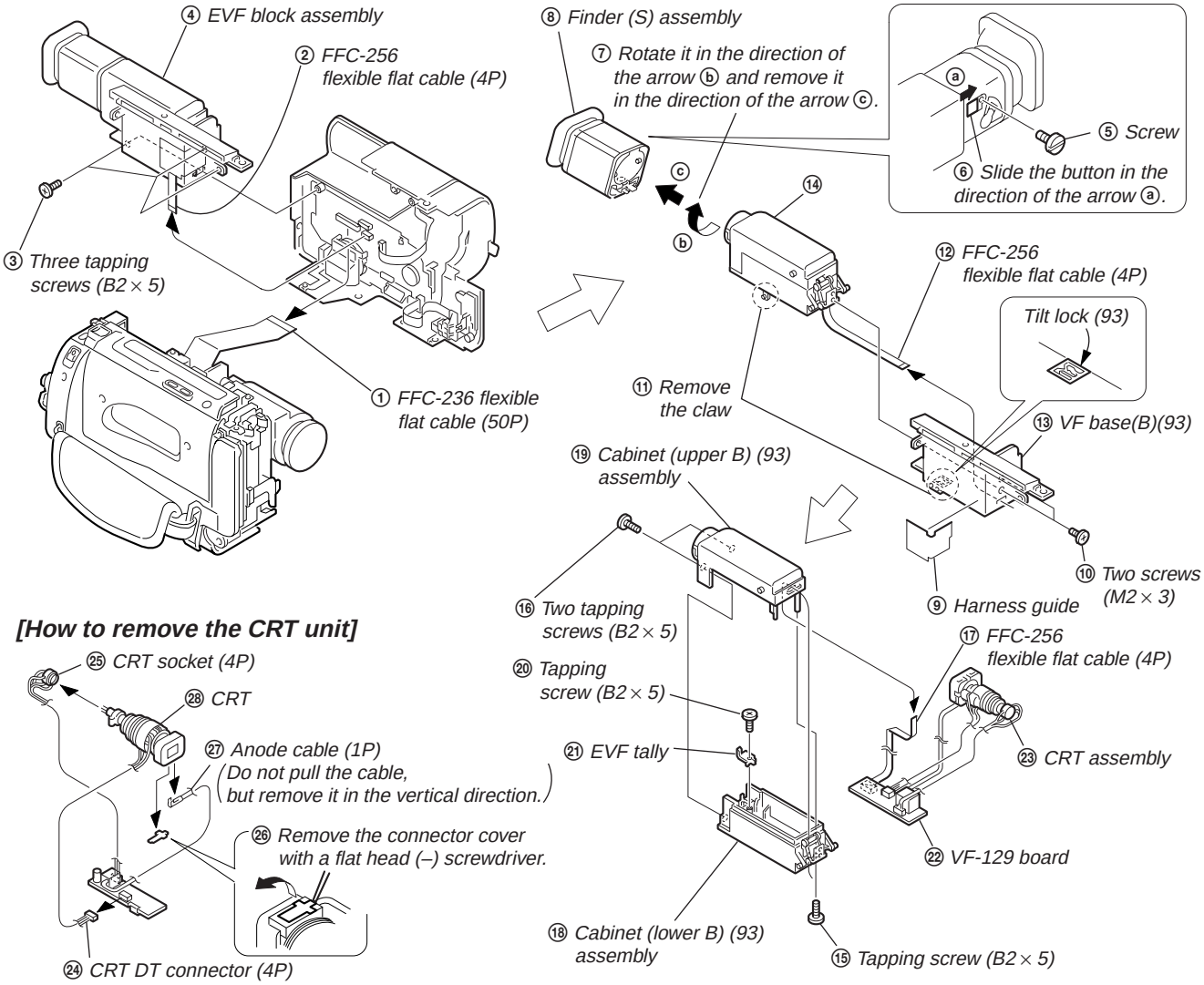
④ EVF block assembly
② FFC-256 flexible flat cable (4P)
③ Three tapping screws (B2 × 5)
① FFC-236 flexible flat cable (50P)
⑧ Finder (S) assembly
⑦ Rotate it in the direction of the arrow ⓑ and remove it in the direction of the arrow ⓒ.
ⓐ
⑤ Screw
⑥ Slide the button in the direction of the arrow ⓐ.
ⓒ
ⓑ
⑭
⑫ FFC-256 flexible flat cable (4P)
Tilt lock (93)
⑪ Remove the claw
⑬ VF base(B)(93)
⑲ Cabinet (upper B) (93) assembly
⑩ Two screws (M2 × 3)
⑨ Harness guide
⑯ Two tapping screws (B2 × 5)
⑰ FFC-256 flexible flat cable (4P)
⑳ Tapping screw (B2 × 5)
㉑ EVF tally
㉓ CRT assembly
㉒ VF-129 board
⑱ Cabinet (lower B) (93) assembly
⑮ Tapping screw (B2 × 5)

[How to remove the CRT unit]

㉕ CRT socket (4P)
㉘ CRT
㉗ Anode cable (1P)
Do not pull the cable, but remove it in the vertical direction.
㉖ Remove the connector cover with a flat head (–) screwdriver.
㉔ CRT DT connector (4P)

[B/W EVF CHECK SERVICE POSITION]

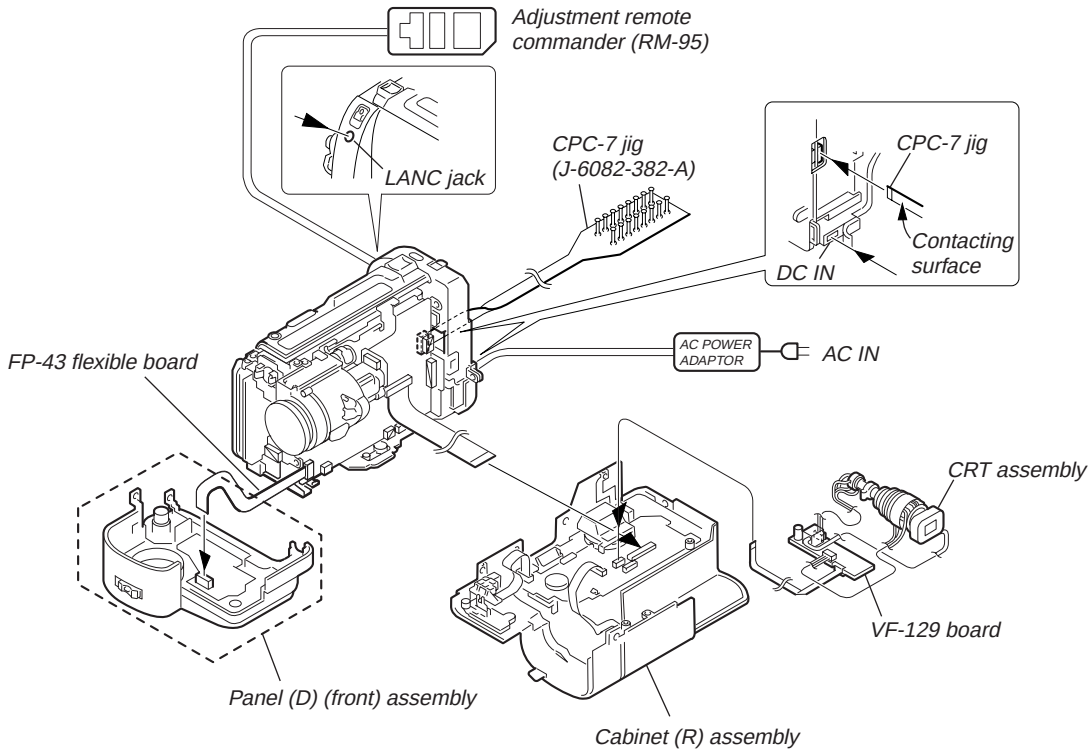

2-5. LENS BLOCK

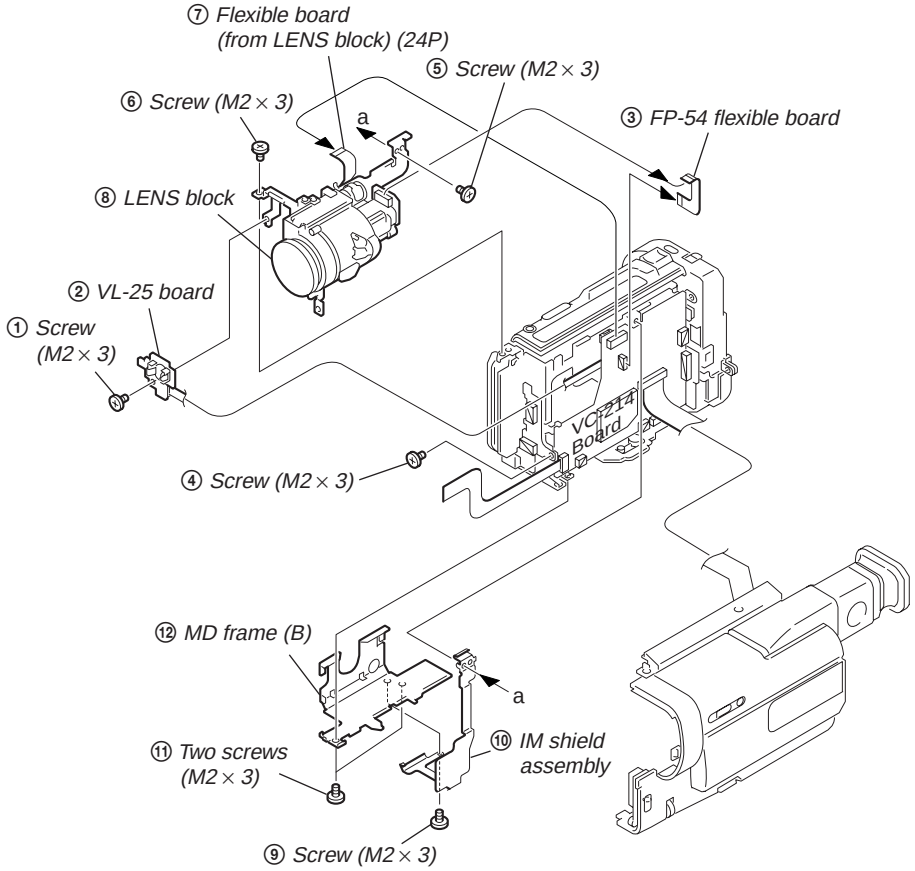

[LENS BLOCK CHECK SERVICE POSITION]

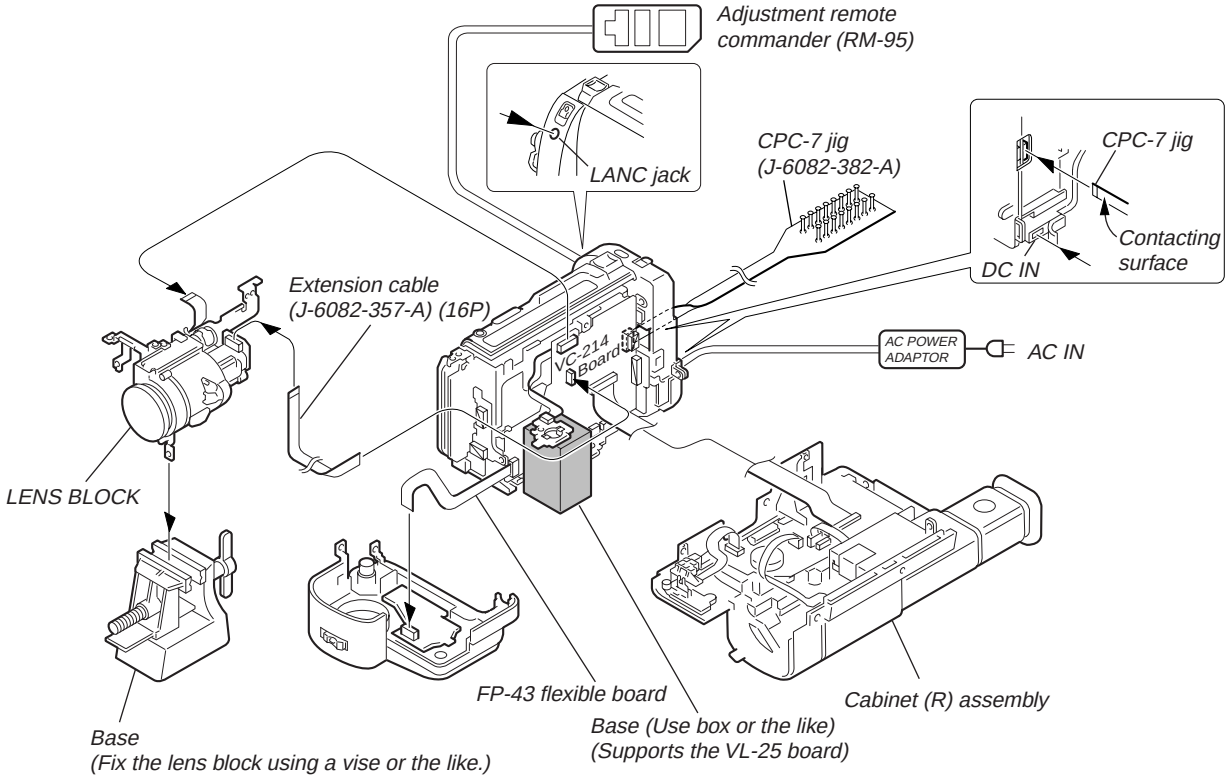

2-6. MECHANISM DECK, VC-214, DD-117 BOARDS

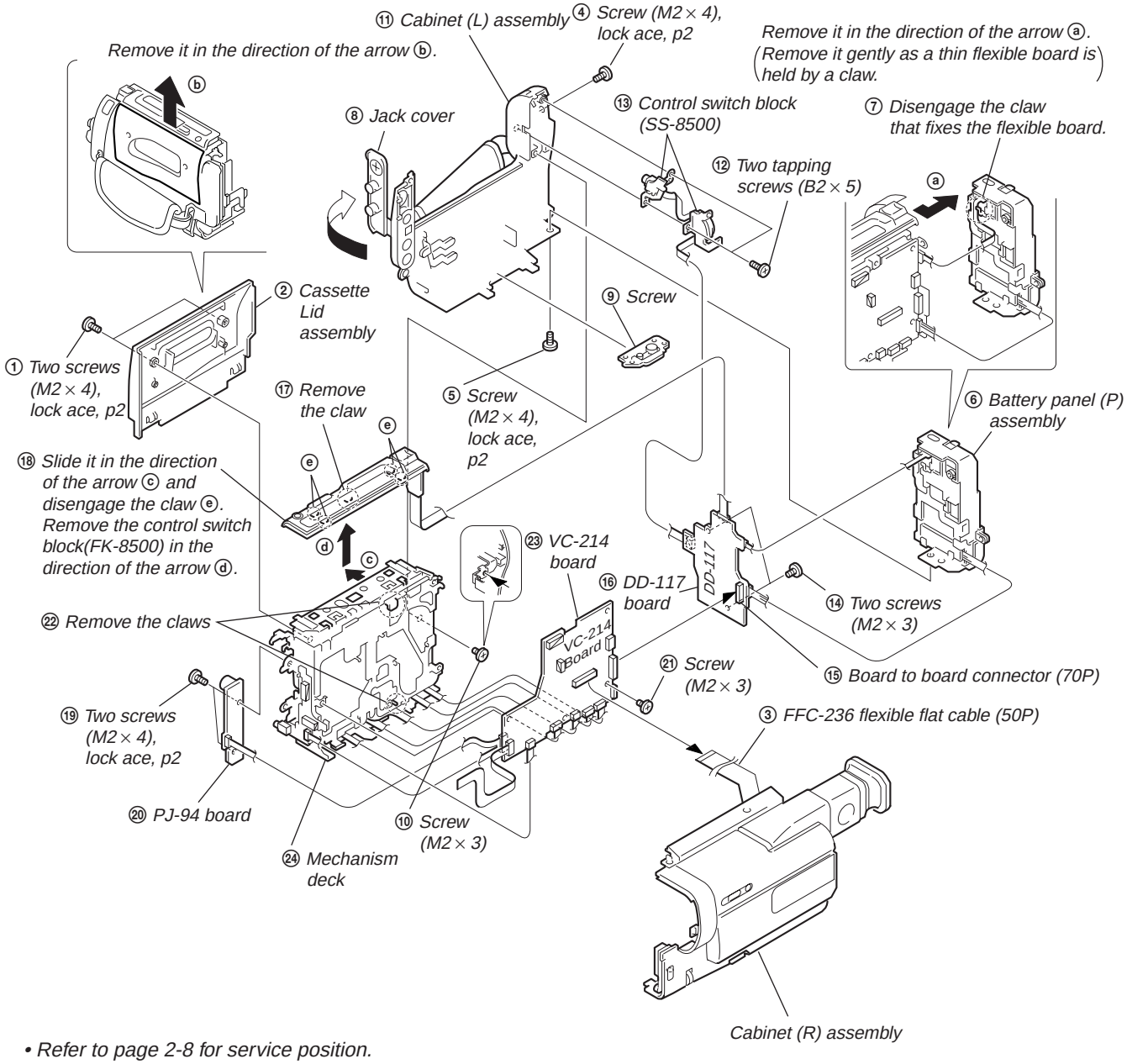
⑪ Cabinet (L) assembly
④ Screw (M2 × 4), lock ace, p2
Remove it in the direction of the arrow ⓑ.
Remove it in the direction of the arrow ⓐ. (Remove it gently as a thin flexible board is held by a claw.)
⑧ Jack cover
⑬ Control switch block (SS-8500)
⑦ Disengage the claw that fixes the flexible board.
⑫ Two tapping screws (B2 × 5)
② Cassette Lid assembly
⑨ Screw
① Two screws (M2 × 4), lock ace, p2
⑰ Remove the claw
⑤ Screw (M2 × 4), lock ace, p2
⑥ Battery panel (P) assembly
⑱ Slide it in the direction of the arrow ⓒ and disengage the claw ⓔ. Remove the control switch block(FK-8500) in the direction of the arrow ⓓ.
⑯ DD-117 board
⑭ Two screws (M2 × 3)
⑮ Board to board connector (70P)
⑲ Two screws (M2 × 4), lock ace, p2
⑳ PJ-94 board
㉒ Remove the claws
㉓ VC-214 board
㉑ Screw (M2 × 3)
③ FFC-236 flexible flat cable (50P)
⑩ Screw (M2 × 3)
㉔ Mechanism deck
Cabinet (R) assembly

• Refer to page 2-8 for service position.

[MECHANISM DECK, VC-214, DD-117 BOARDS CHECK SERVICE POSITION]

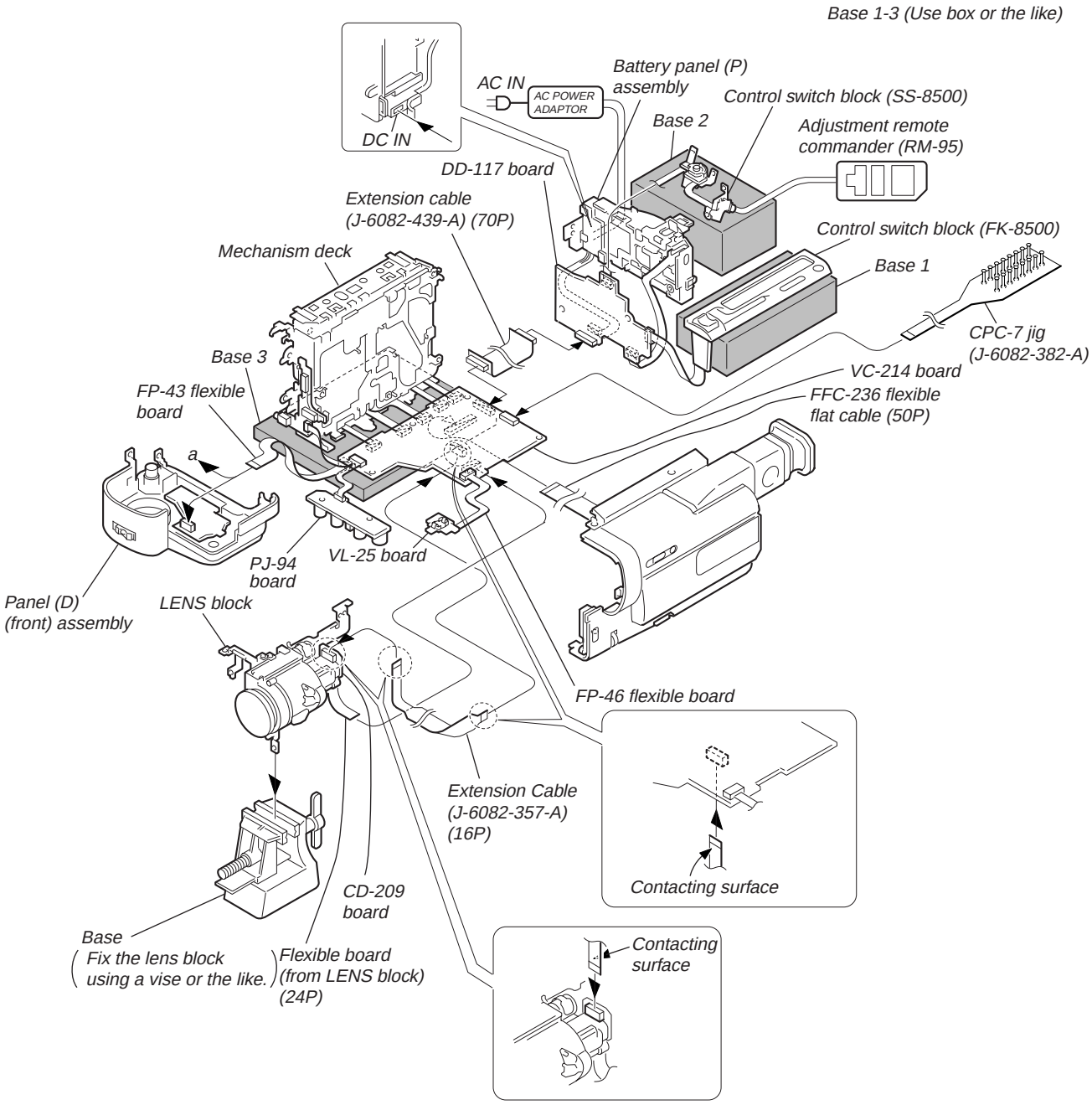

2-7. VIDEO LIGHT

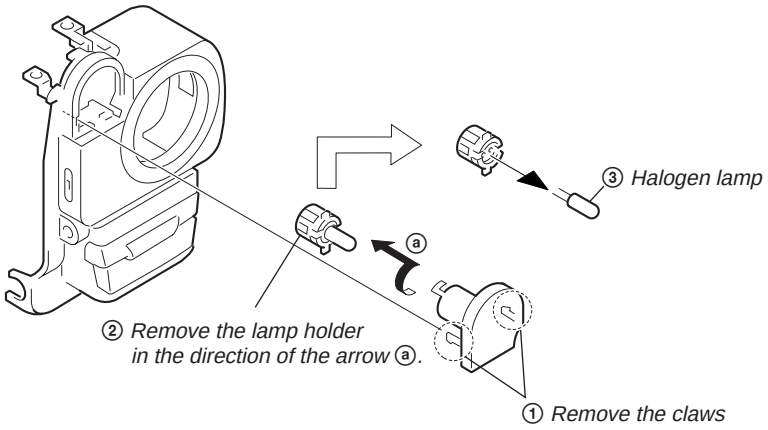

2-8. CF-58 BOARD (TR913E)

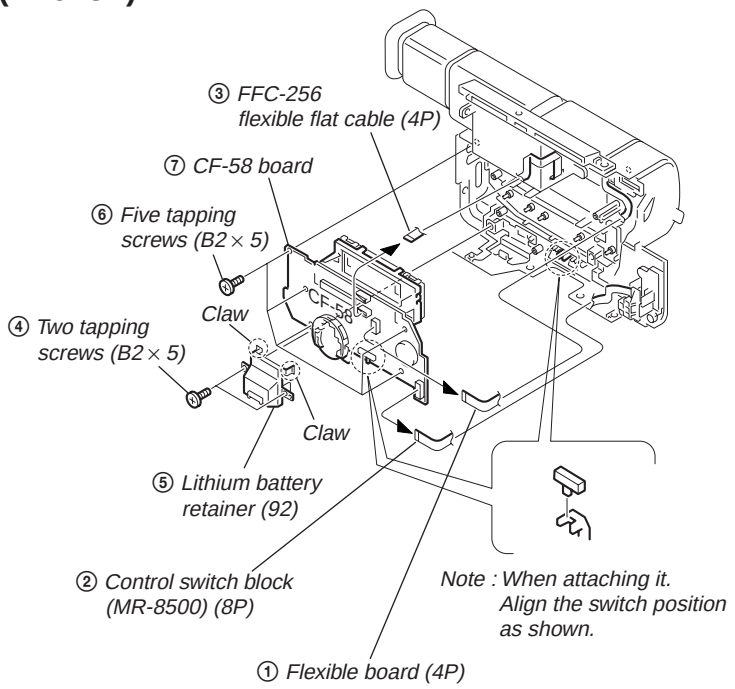

CF-58 BOARD (TR950E)

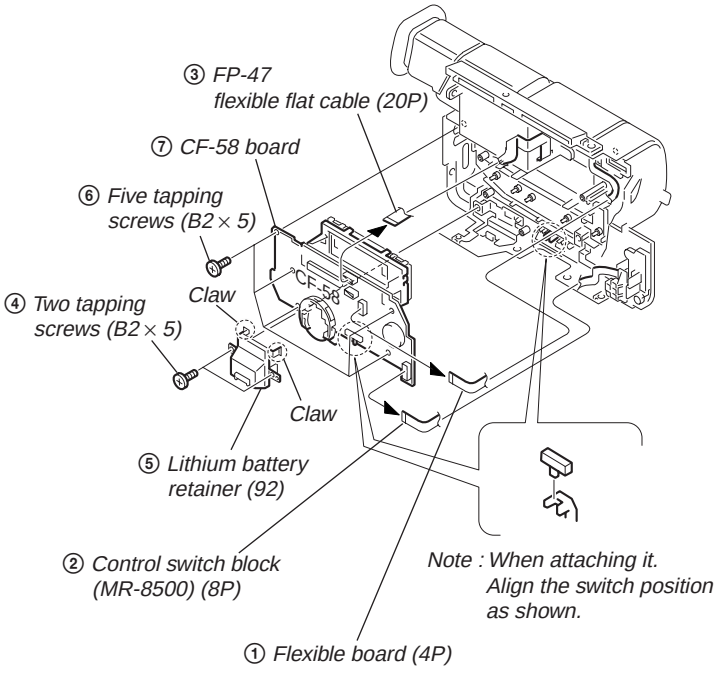

2-9. HOW TO IDENTIFY DRUM AND NOTE

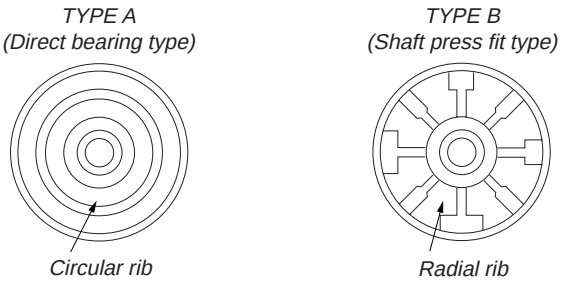

(When a drum is viewed from the top.)

Note

Ref.No. / TYPE	M901	808
A	DGH-0F1A-R ⇨	SCREW ASSY, DRUM ATTACHED X-3947-895-1
B	DGH-0E9A-R ⇨	SCREW (M1.4) 3-971-939-01

The fixing screw differs depending on the types of drums. Be sure to check the type of drum and use the screw of the same type.
Be careful that the drum of DGH-0F1A-R (Type A) only is supplied as repair part.

M901	A-7048-899-A	DRUM BLOCK ASSY (DGH-0F1A-R)	808	X-3947-895-1	SCREW ASSY, DRUM ATTACHED (TYPE A)
			808	3-971-939-01	SCREW (M1.4) (TYPE B)

2-10. CIRCUIT BOARDS LOCATION

(TR913E)

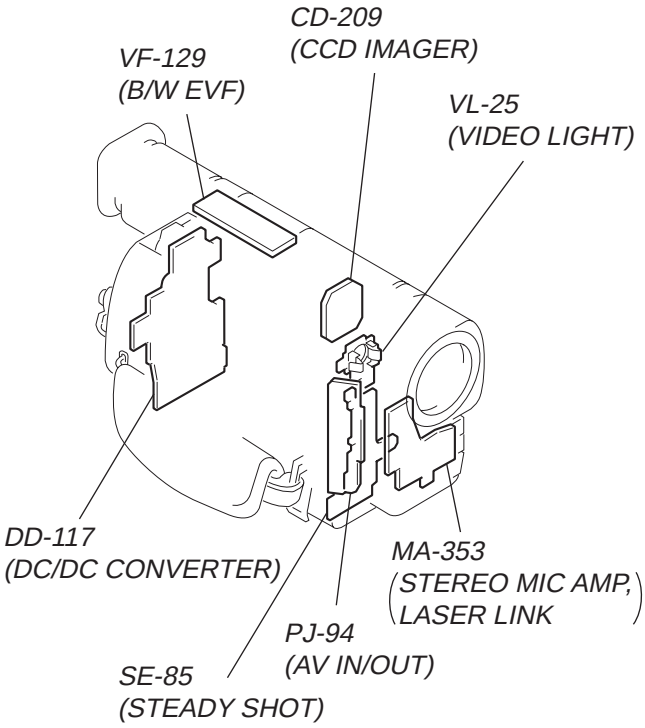

(TR950E)

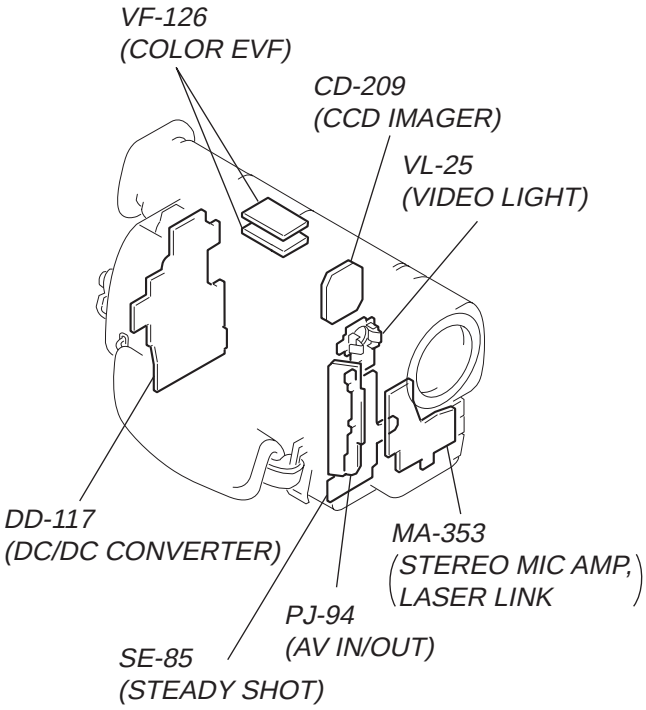

(TR913E/TR950E)

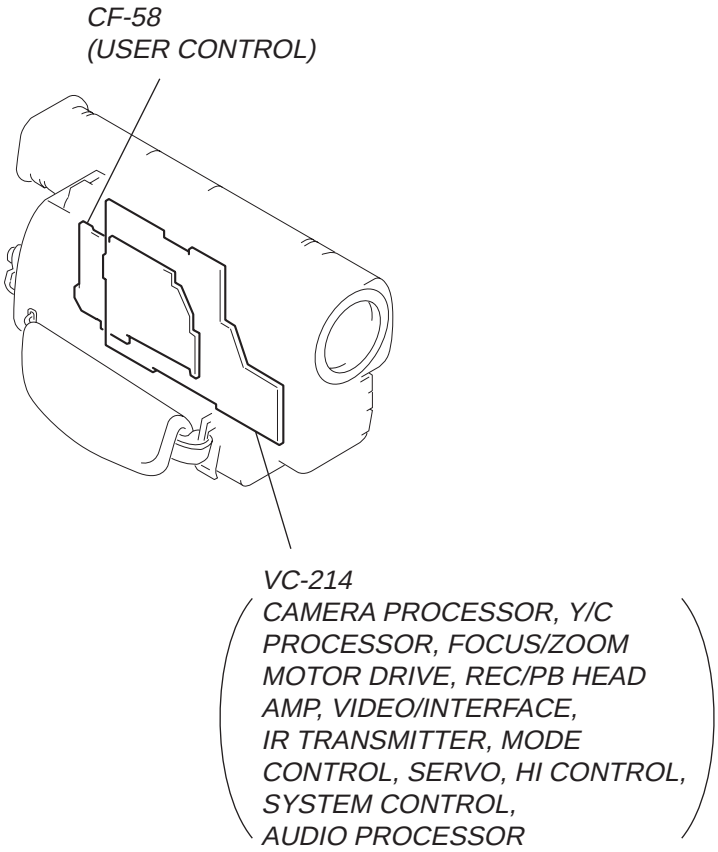

2-11. FLEXIBLE BOARDS LOCATION

(TR913E/950E)

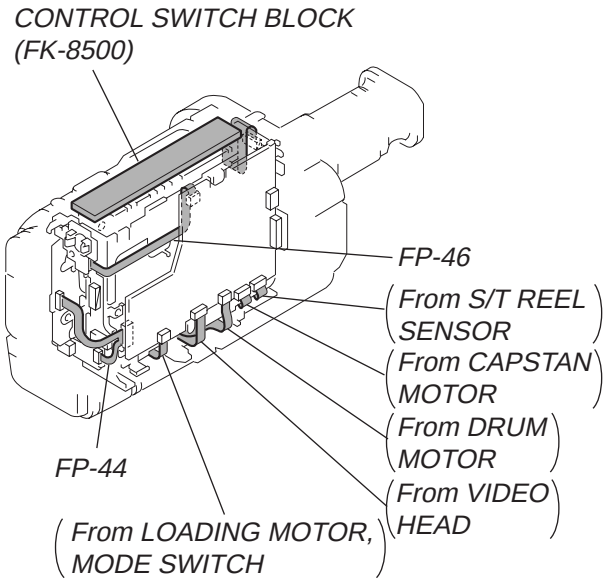

(TR913E)

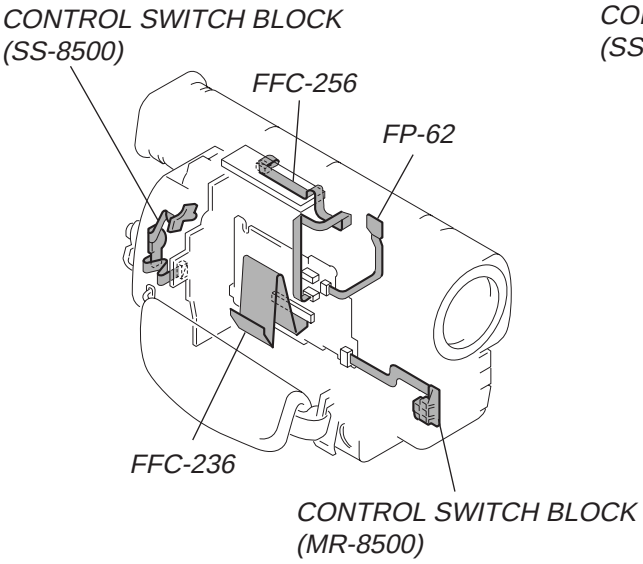

(TR950E)

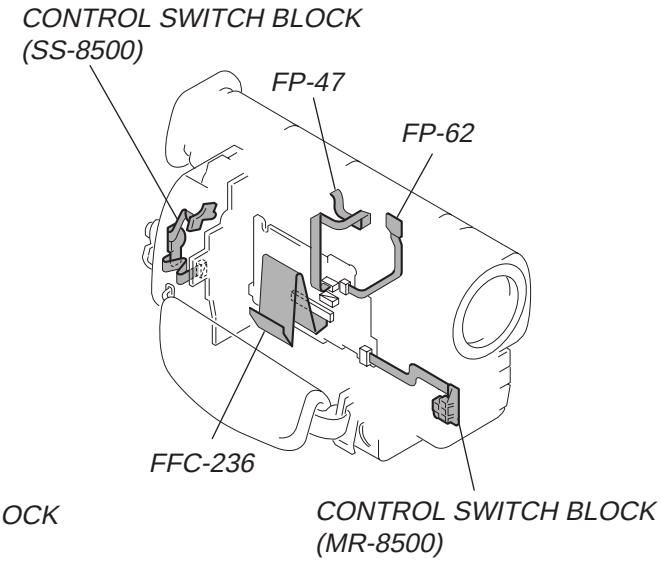

(TR913E/950E)

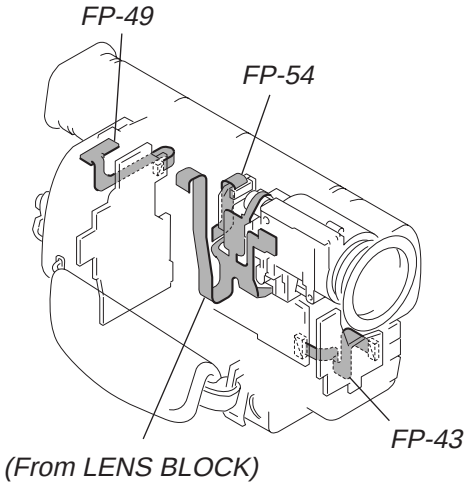

SECTION 3
BLOCK DIAGRAMS

3-1. OVERALL BLOCK DIAGRAM

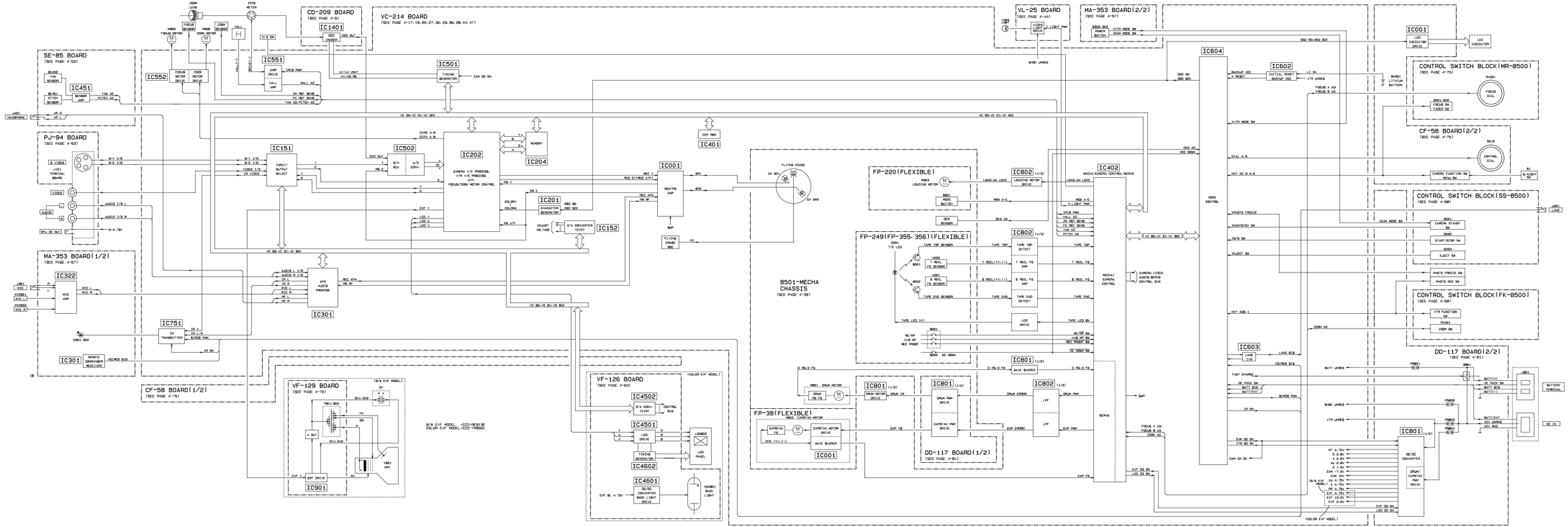

3-2. CAMERA/VIDEO BLOCK DIAGRAM

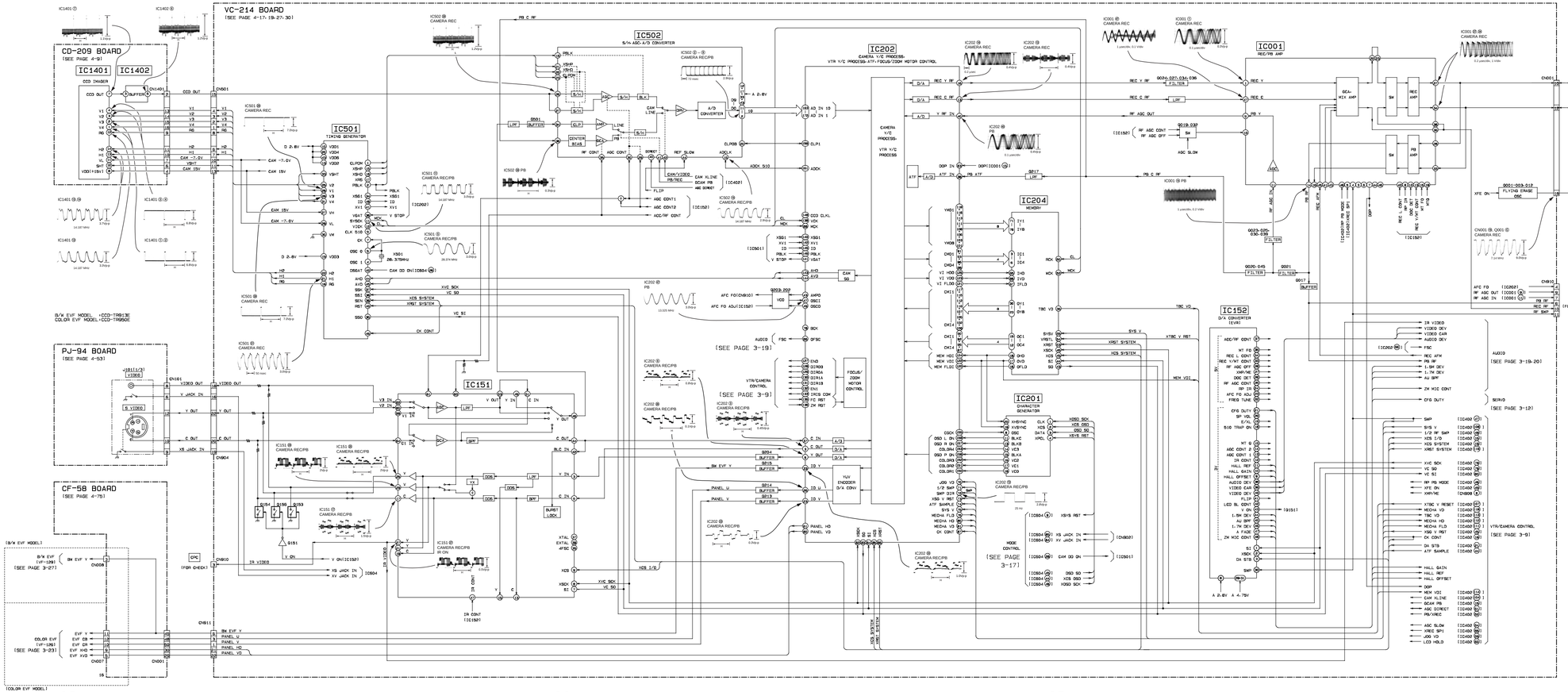

3-3. VTR/CAMERA CONTROL BLOCK DIAGRAM

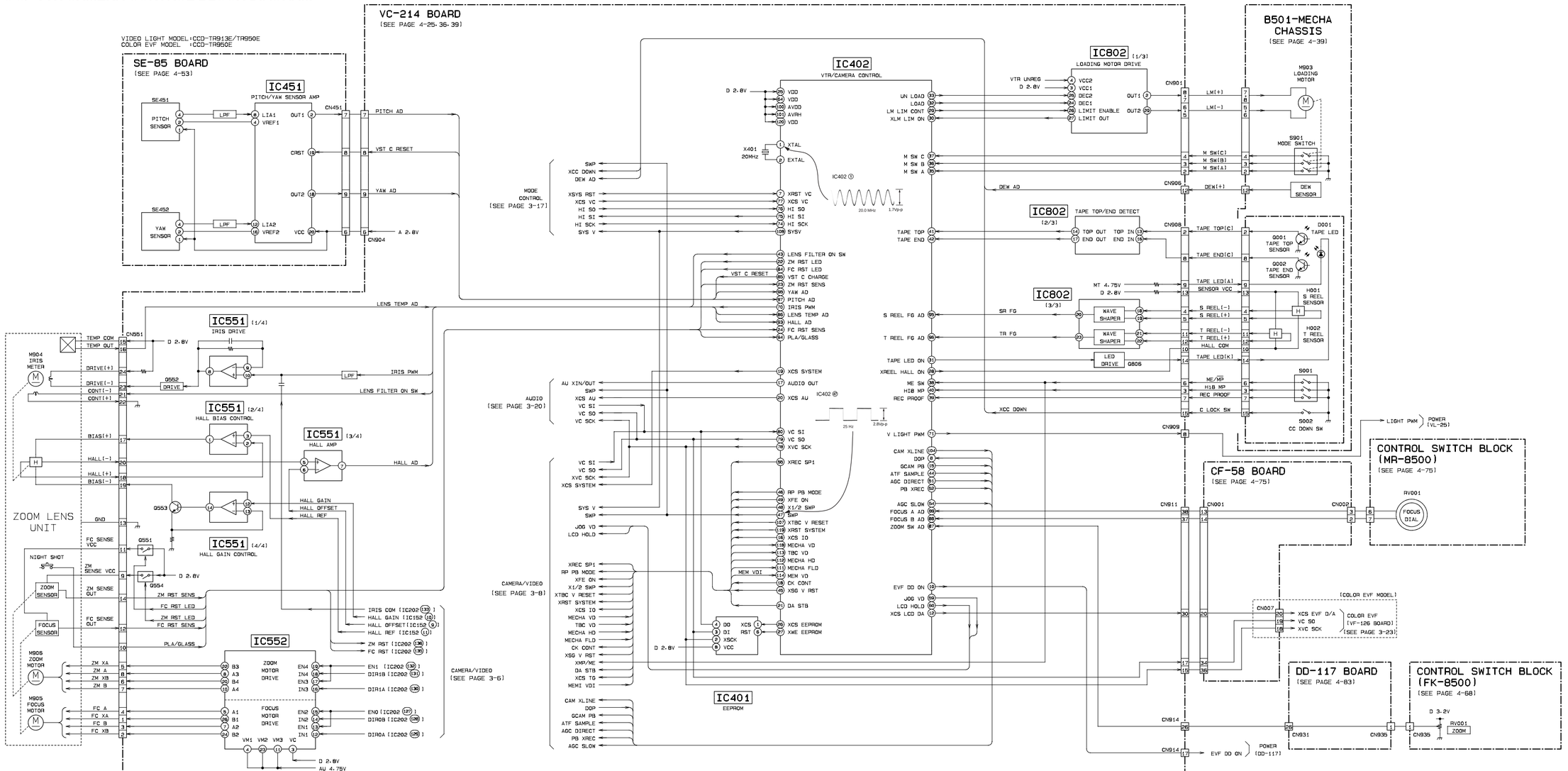

3-4. SERVO BLOCK DIAGRAM

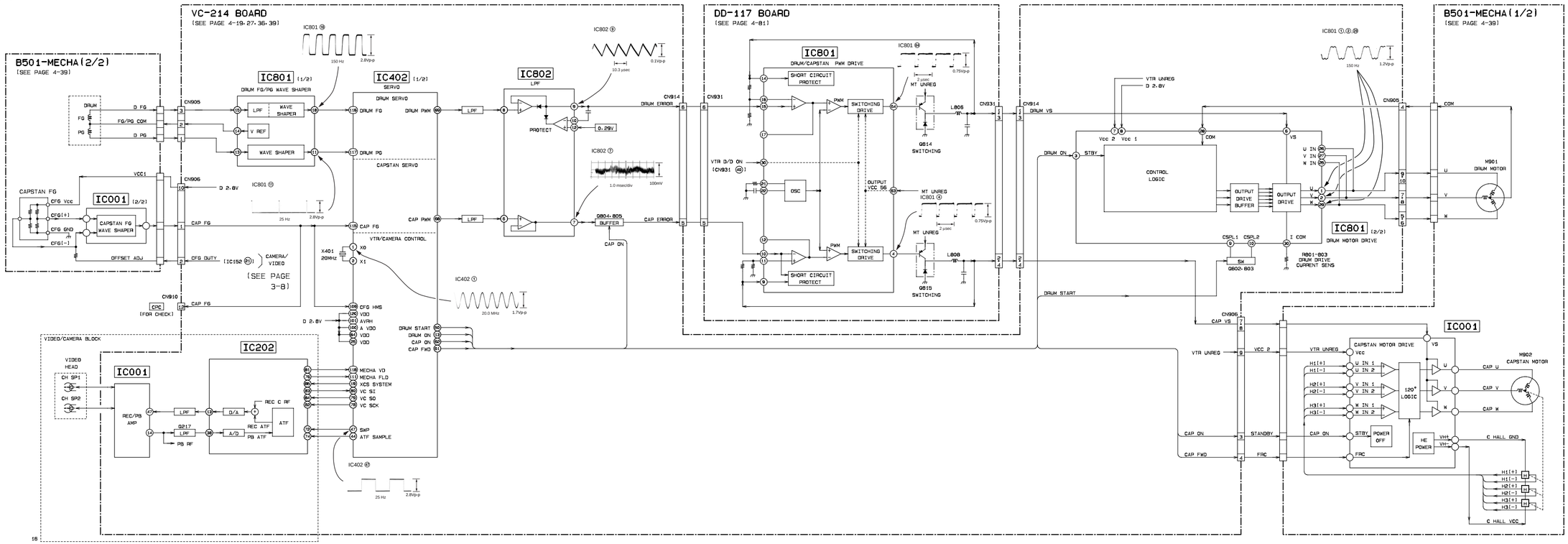

3-5. MODE CONTROL BLOCK DIAGRAM

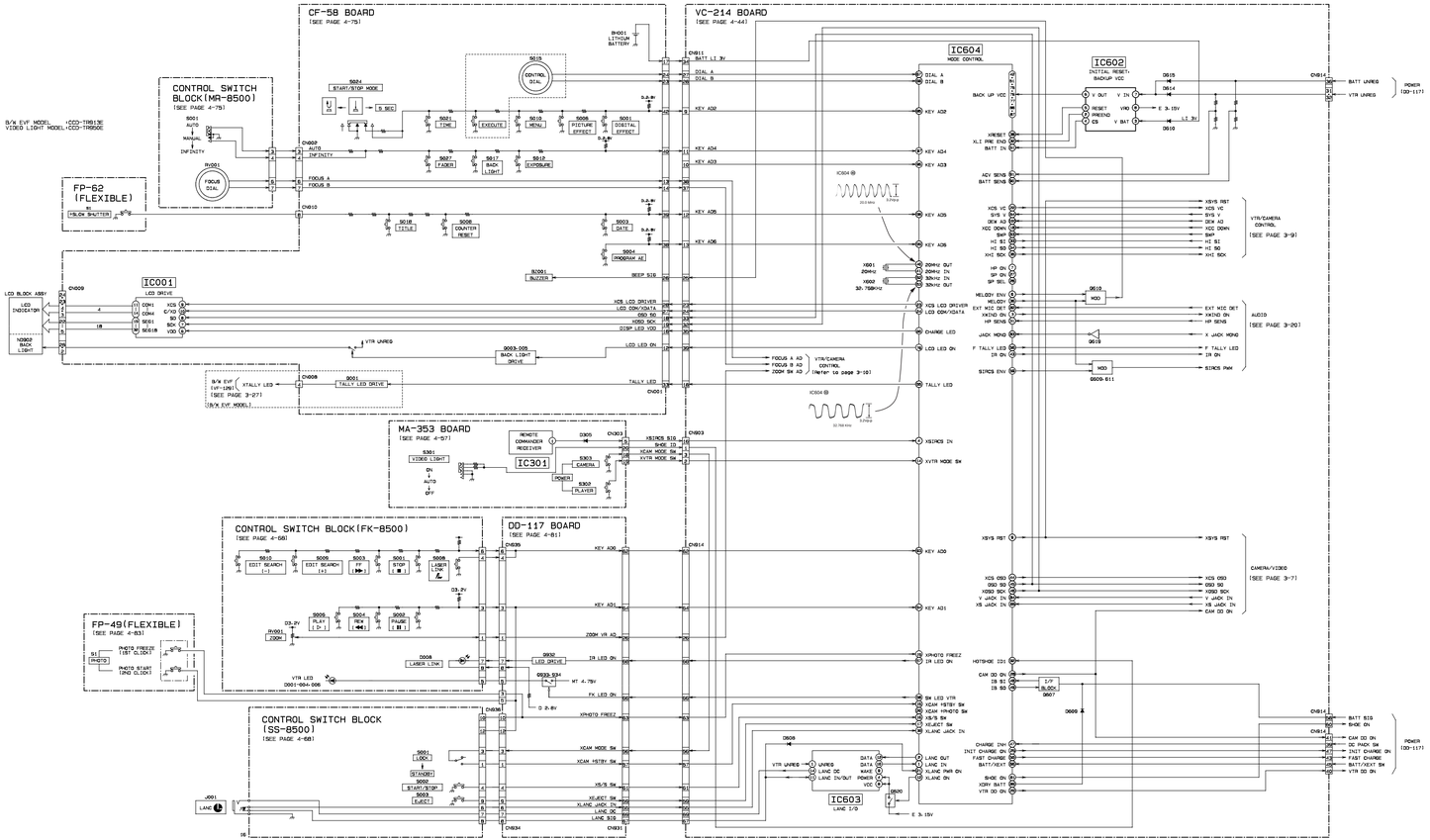

3-6. AUDIO BLOCK DIAGRAM

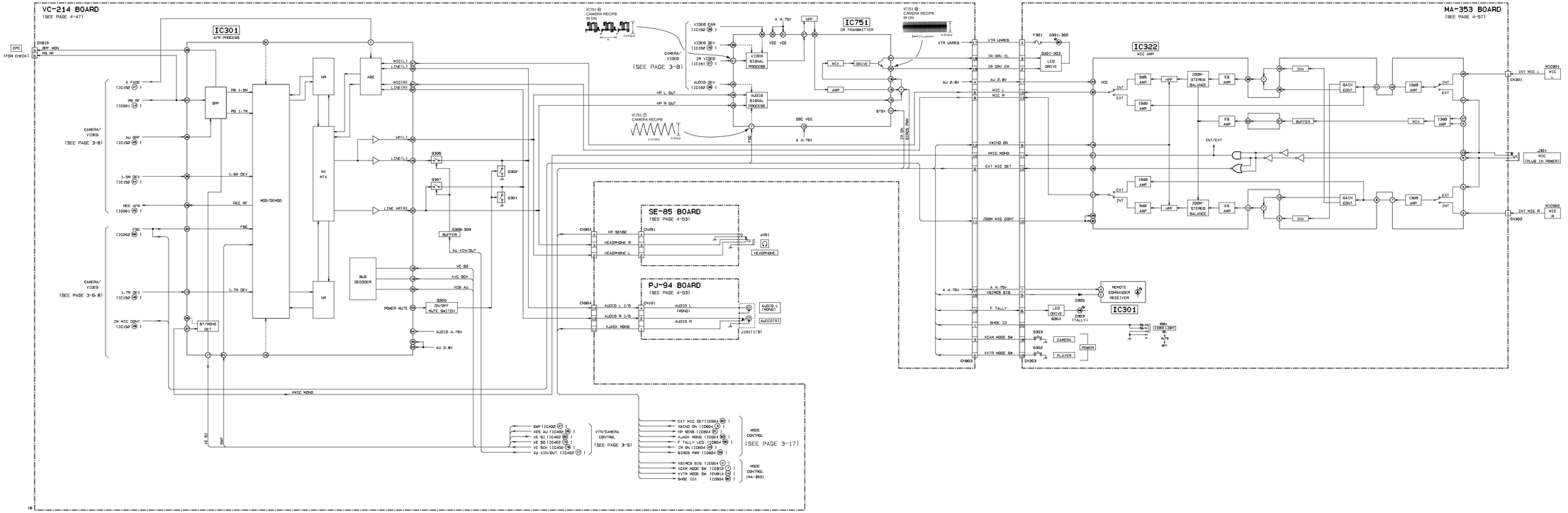

3-7. COLOR EVF BLOCK DIAGRAM (CCD-TR950E)

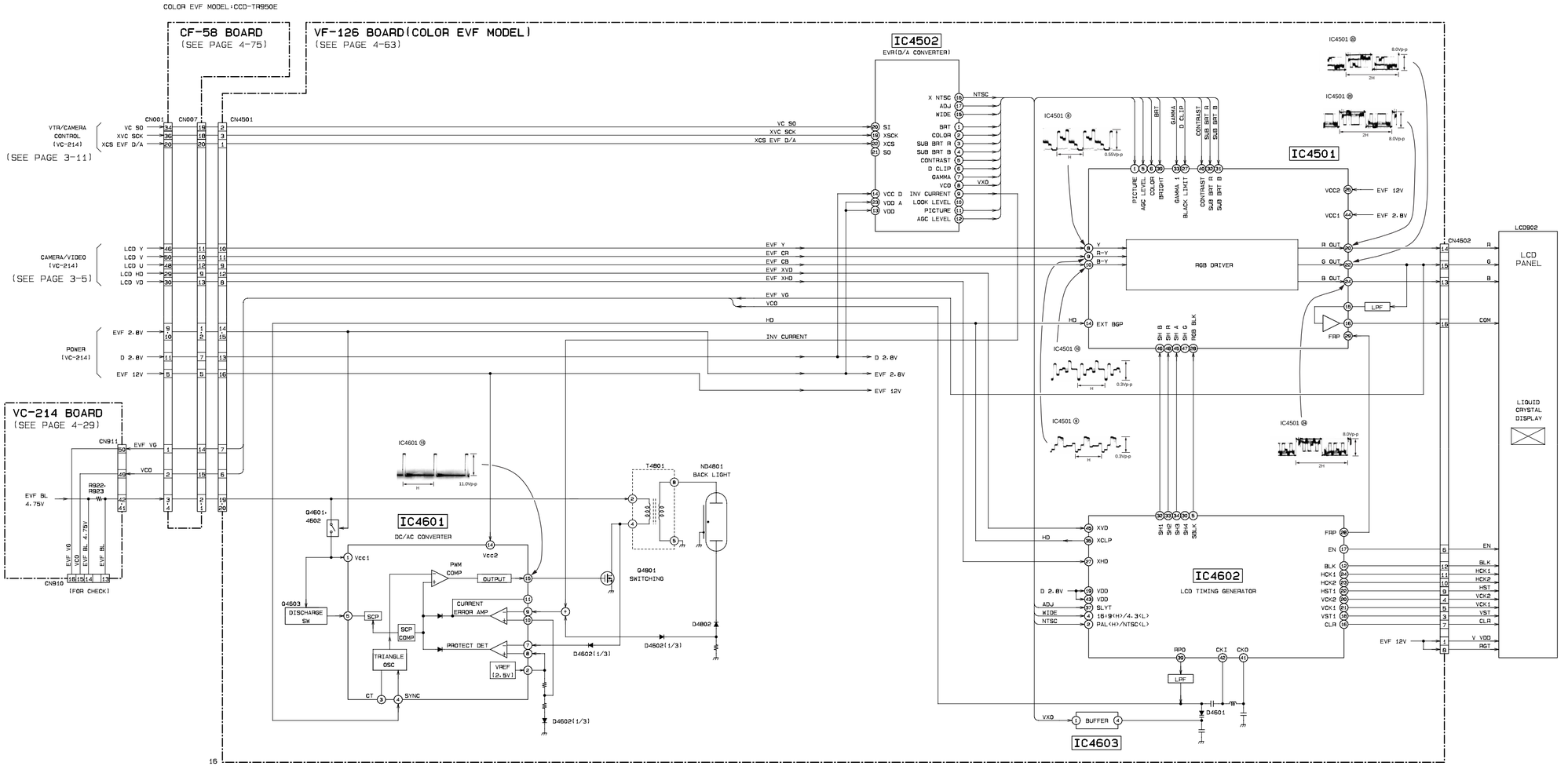

3-8. B/W EVF BLOCK DIAGRAM (CCD-TR913E)

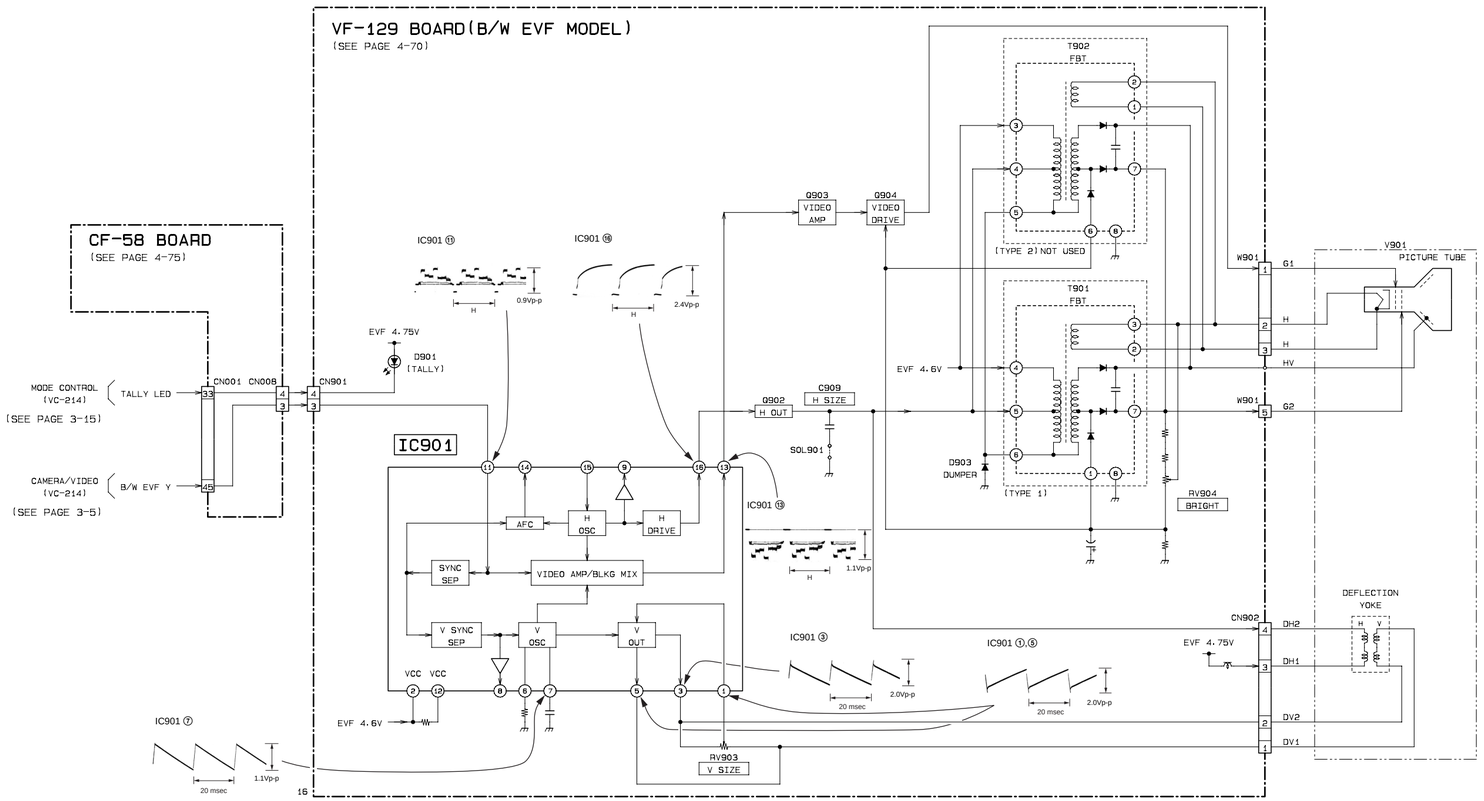

3-9. POWER BLOCK DIAGRAM

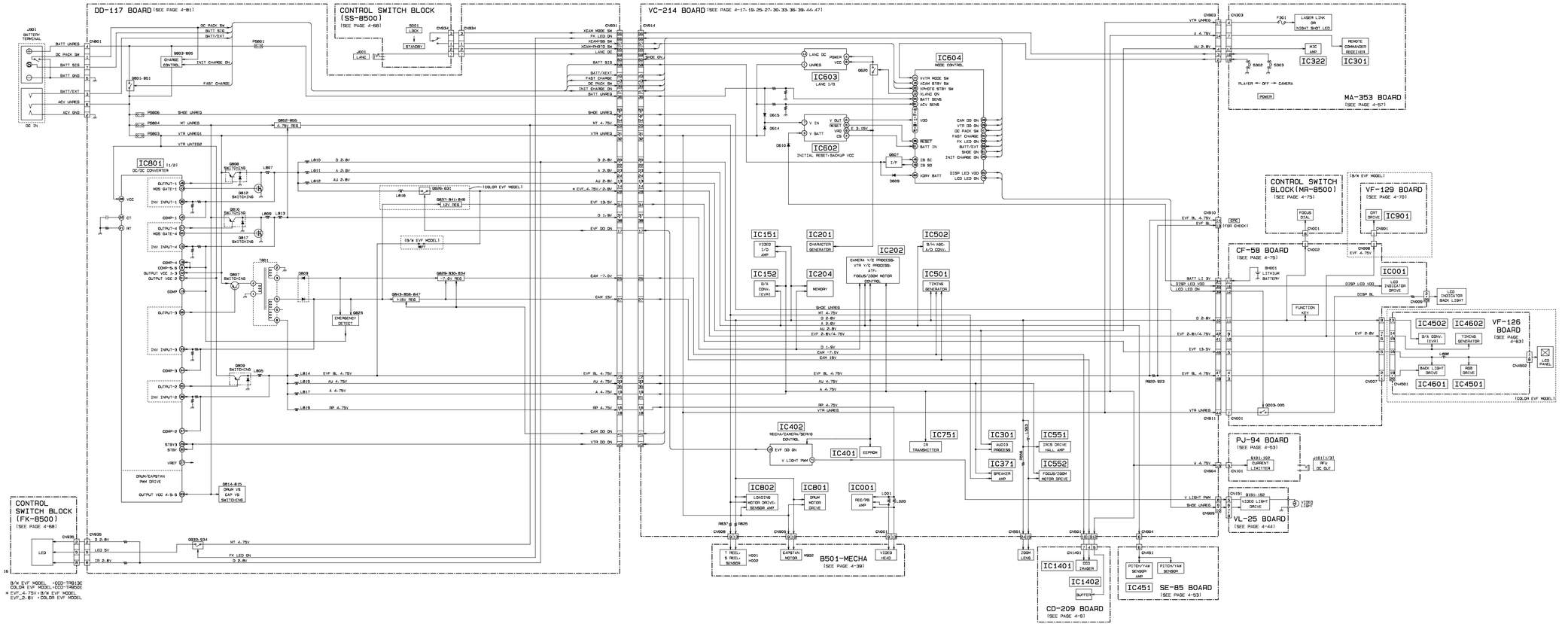

SECTION 4
PRINTED WIRING BOARDS AND SCHEMATIC DIAGRAMS

4-1. FRAME SCHEMATIC DIAGRAM-1

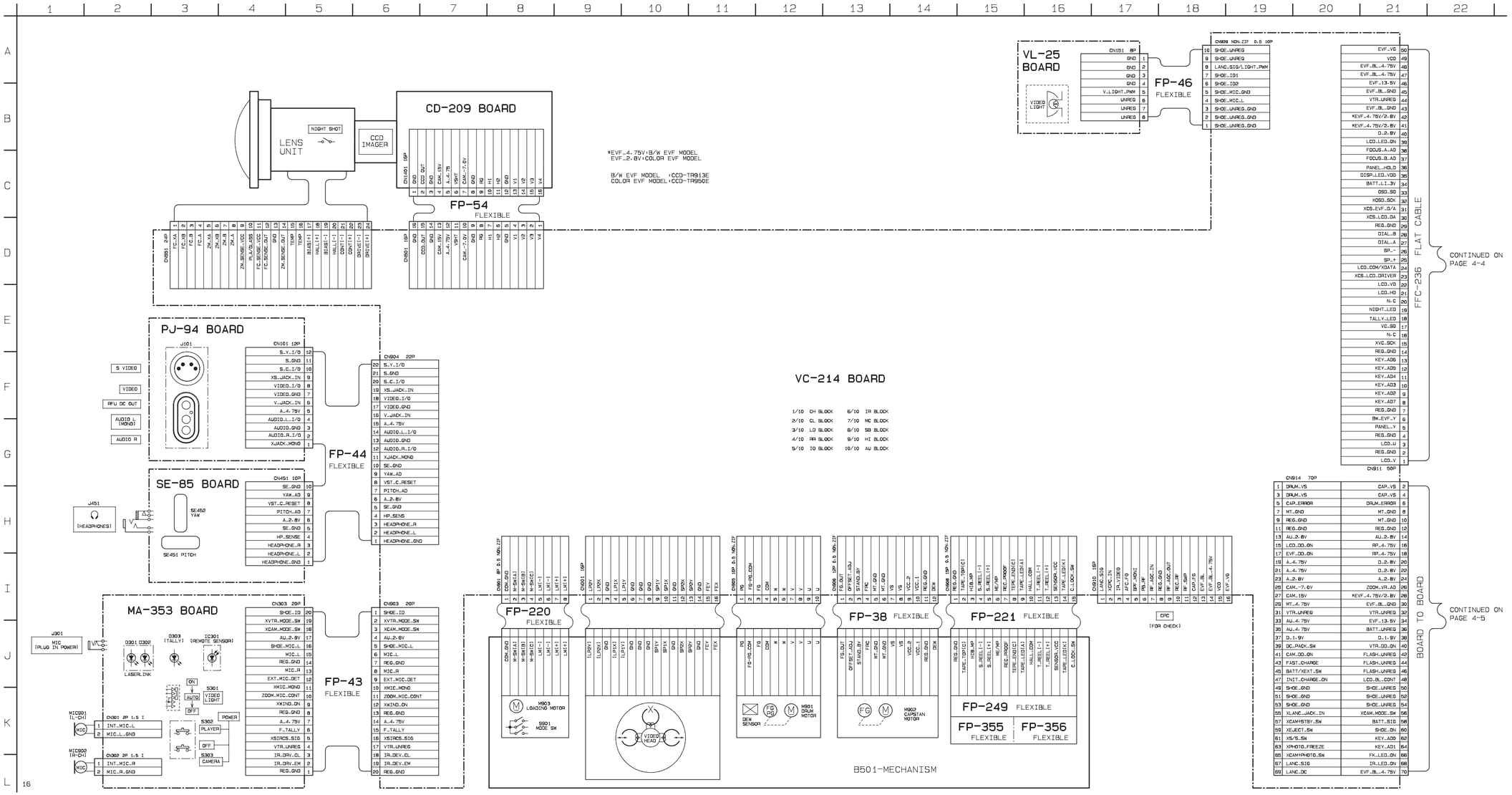

FRAME SCHEMATIC DIAGRAM (1/2)

FRAME SCHEMATIC DIAGRAM-2

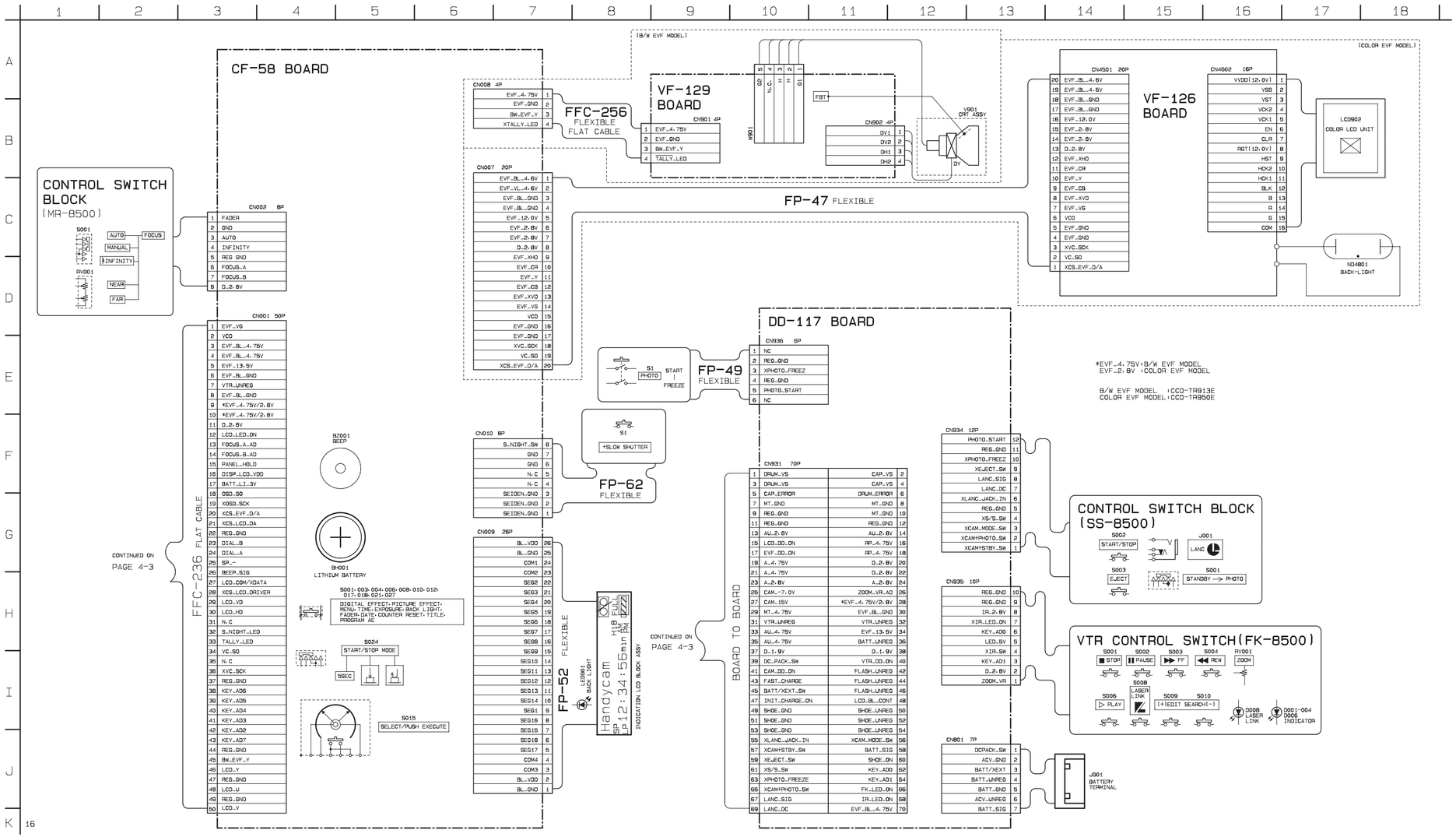

4-2. PRINTED WIRING BOARDS AND SCHEMATIC DIAGRAMS

THIS NOTE IS COMMON FOR WIRING BOARDS AND SCHEMATIC DIAGRAMS
(In addition to this, the necessary note is printed in each block)

(For printed wiring boards)

- ▒▒▒: Pattern from the side which enables seeing.
  (The other layers' patterns are not indicated.)
- Through hole is omitted.
- Circled numbers refer to waveforms.
- There are few cases that the part printed on diagram isn't mounted in this model.
- Chip parts.

Transistor

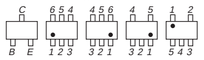

Diode

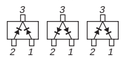

(For schematic diagrams)

- All capacitors are in μF unless otherwise noted. pF : μμF. 50V or less are not indicated except for electrolytics and tantalums.
- Chip resistors are 1/10W unless otherwise noted.
  kΩ=1000Ω, MΩ=1000kΩ.
- Caution when replacing chip parts.
  New parts must be attached after removal of chip.
  Be careful not to heat the minus side of tantalum capacitor, Because it is damaged by the heat.
- Some chip part will be indicated as follows.

Example	C541	L452
	22U	10UH
	TA A	2520

Kinds of capacitor
Temperature characteristics
External dimensions (mm)

- Constants of resistors, capacitors, ICs and etc with XX indicate that they are not used.
  In such cases, the unused circuits may be indicated.
- Parts with ★ differ according to the model/destination.
  Refer to the mount table for each function.
- All variable and adjustable resistors have characteristic curve B, unless otherwise noted.
- Signal name
  XEDIT → $\overline{\text{EDIT}}$ PB/XREC → PB/$\overline{\text{REC}}$
- : non flammable resistor
- : fusible resistor
- : panel designation
- : B+ Line
- : B– Line
- : IN/OUT direction of (+,–) B LINE.
- : adjustment for repair.
- Circled numbers refer to waveforms.

Note : The components identified by mark ⚠ or dotted line with mark ⚠ are critical for safety.
Replace only with part number specified.

(Measuring conditions voltage and waveform)

- Voltages and waveforms are measured between the measurement points and ground when camera shoots color bar chart of pattern box. They are reference values and reference waveforms.
  (VOM of DC 10 MΩ input impedance is used.).
- Voltage values change depending upon input impedance of VOM used.)

1. Connection

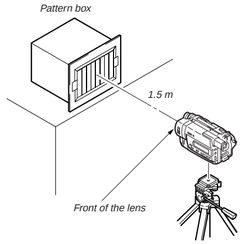

2. Adjust the distance so that the output waveform of Fig. a and the Fig. b can be obtain.

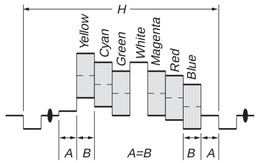

Fig. a (Video output terminal output waveform)

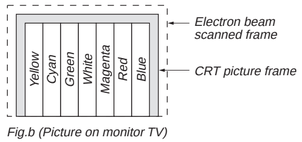

Fig.b (Picture on monitor TV)

When indicating parts by reference number, pleas include the board name.

CD-209 (CCD IMAGER) PRINTED WIRING BOARD

— Ref. No. CD-209 Board; 10,000 Series —

CD-209 BOARD

C1401	A-2
C1405	A-1
C1406	A-1
C1407	B-2
C1408	B-2
C1409	B-1
C1410	B-1
C1411	B-2
C1412	B-1
CN1401	B-3
IC1401	A-3
IC1402	B-2
L1401	A-2
L1402	B-1
R1401	A-1
R1405	A-1
R1406	B-2
R1407	B-2
R1408	B-2
R1409	B-1

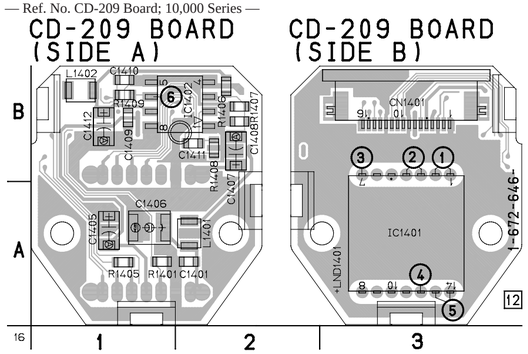

For printed wiring boards

- This board is six-layer print board. However, the patterns of layers two to five have not been included in the diagram.

There are few cases that the part printed on this diagram isn't mounted in this model.

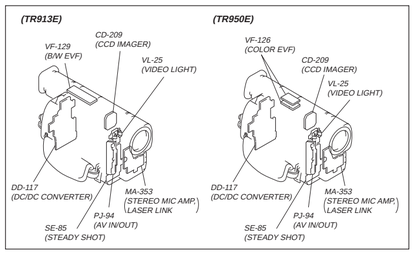

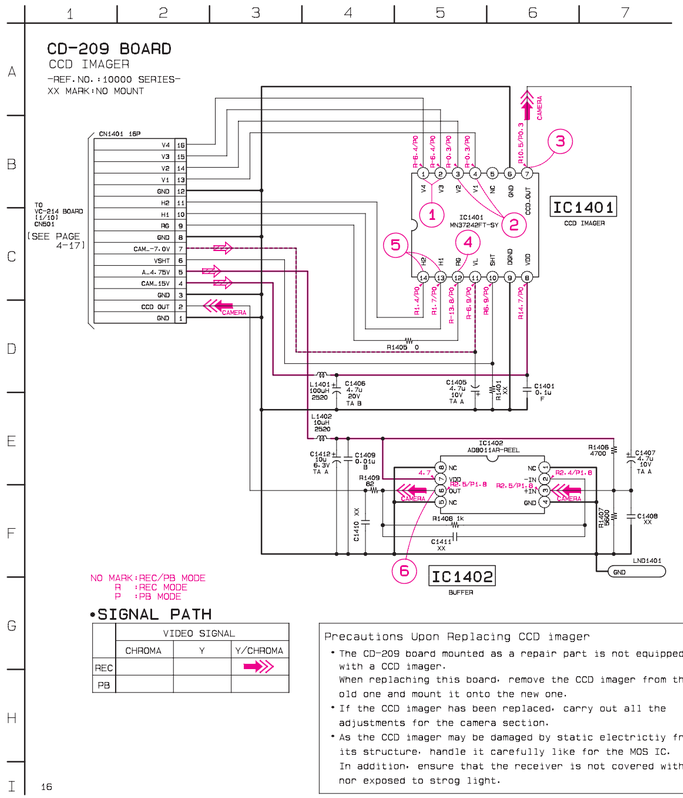

Precautions Upon Replacing CCD imager

- The CD-209 board mounted as a repair part is not equipped with a CCD imager.
  When replacing this board, remove the CCD imager from the old one and mount it onto the new one.
- If the CCD imager has been replaced, carry out all the adjustments for the camera section.
- As the CCD imager may be damaged by static electricity from its structure, handle it carefully like for the MOS IC.
  In addition, ensure that the receiver is not covered with dusts nor exposed to strog light.

CD-209 BOARD

CAMERA REC

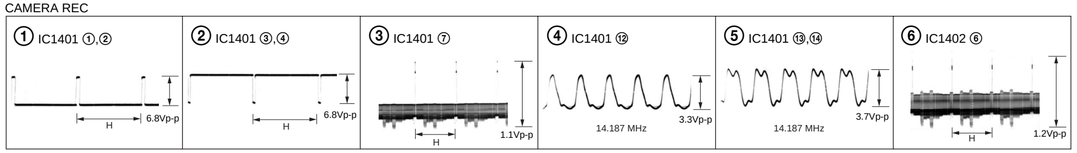

For printed wiring boards

- This board is six-layer print board. However, the patterns of layers two to five have not been included in the diagram.
- Chip parts

Transistor

There are few cases that the part printed on this diagram isn't mounted in this model.

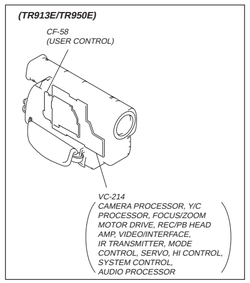
(TR913E/TR950E)
CF-58
(USER CONTROL)
VC-214
CAMERA PROCESSOR, Y/C PROCESSOR, FOCUS/ZOOM MOTOR DRIVE, REC/PB HEAD AMP, VIDEO/INTERFACE, IR TRANSMITTER, MODE CONTROL, SERVO, HI CONTROL, SYSTEM CONTROL, AUDIO PROCESSOR

VC-214 BOARD (SIDE A)

C006	A-4	C324	A-1	C801	A-7	Q033	C-4	R229	E-6	R579	F-4
C008	A-5	C325	B-1	C802	A-7	Q034	C-4	R230	E-6	R583	G-5
C009	B-5	C326	B-2	C803	A-6	Q036	C-5	R231	E-7	R605	G-9
C011	B-5	C327	A-1	C804	B-6	Q040	C-6	R232	E-6	R606	G-7
C021	B-5	C328	B-2	C805	B-6	Q043	C-4	R233	E-6	R610	G-8
C022	B-5	C329	A-2	C806	B-7	Q044	C-4	R234	E-6	R611	G-8
C027	A-4	C330	B-2	C807	B-6	Q204	D-6	R235	E-6	R613	G-8
C028	B-4	C331	B-2	C808	B-7	Q205	E-8	R236	E-6	R614	G-7
C030	A-5	C332	A-2	C809	B-7	Q208	D-6	R237	E-6	R622	F-9
C031	B-4	C333	A-2	C810	B-7	Q213	D-6	R238	E-6	R628	F-9
C034	B-5	C334	B-2	C811	B-6	Q214	D-6	R239	E-7	R645	E-8
C035	C-4	C335	A-2	C812	B-7	Q215	E-7	R241	E-6	R650	G-7
C036	B-4	C336	B-2	C813	B-6	Q216	E-7	R242	E-7	R664	E-8
C038	B-3	C337	A-3	C814	C-6	Q217	E-8	R243	E-8	R666	E-9
C039	B-4	C338	B-3	C815	B-7	Q310	A-2	R251	F-7	R667	E-9
C040	B-4	C339	A-3	C816	B-6	Q501	D-4	R252	F-7	R668	E-9
C041	B-4	C340	B-3	C817	C-6	Q551	G-5	R253	G-7	R669	E-9
C045	B-5	C341	A-3	C818	B-6	Q552	F-4	R255	E-8	R670	E-8
C046	C-4	C342	B-3	C819	B-6	Q553	E-5	R258	E-6	R671	E-8
C047	B-5	C343	B-1	C820	B-7	Q554	G-5	R259	E-7	R672	E-8
C048	B-4	C344	B-3	C821	B-6	Q608	G-9	R260	D-6	R673	E-8
C052	B-5	C345	A-3	C822	B-7	Q609	G-8	R261	E-7	R681	F-9
C053	B-5	C346	A-3	C823	A-8	Q610	G-8	R262	E-7	R682	F-9
C056	B-4	C347	B-3	C836	A-9	Q611	G-8	R308	B-1	R683	G-9
C058	B-4	C389	A-3	C838	A-8	Q801	C-6	R310	B-1	R684	F-9
C062	C-5	C402	A-7	C839	A-9	Q802	B-6	R313	A-1	R685	G-9
C065	C-6	C411	B-9	C840	A-9	Q803	C-7	R317	A-1	R690	E-8
C069	C-6	C412	B-8			Q806	A-9	R318	B-2	R691	E-8
C071	C-5	C415	B-8	CN001	A-4			R319	A-3	R693	G-9
C073	B-3	C416	B-8	CN501	E-5	R004	A-5	R320	B-2	R695	G-9
C075	C-4	C417	C-7	CN551	G-5	R014	B-5	R321	A-1	R696	G-8
C078	C-4	C418	A-7	CN901	A-2	R035	B-5	R322	A-3	R697	G-8
C079	C-4	C419	B-8	CN902	D-7	R038	B-4	R323	B-3	R698	E-8
C081	C-5	C502	E-5	CN903	A-1	R039	B-4	R325	B-3	R801	B-6
C082	C-5	C512	D-4	CN905	A-6	R043	C-4	R331	A-3	R802	B-6
C084	C-5	C513	D-5	CN906	A-7	R044	B-4	R343	A-3	R803	B-6
C085	C-6	C516	E-4	CN907	D-9	R045	B-4	R350	A-3	R804	A-6
C088	C-5	C517	D-4	CN908	A-8	R046	C-4	R405	A-7	R805	A-6
C089	C-4	C519	D-4	CN911	C-7	R056	B-4	R406	A-7	R806	B-6
C156	C-2	C520	D-4	CN914	C-9	R058	B-4	R407	A-8	R807	A-6
C157	C-2	C521	D-4			R063	C-5	R409	A-8	R808	B-6
C158	C-2	C522	D-4	D002	C-4	R071	D-4	R410	A-8	R809	B-6
C160	C-2	C523	D-4	D551	G-4	R072	B-4	R416	A-8	R813	A-8
C161	C-2	C524	D-4	D610	D-6	R073	B-4	R420	B-8	R814	A-7
C166	C-2	C525	D-4	D910	D-3	R074	B-4	R421	B-8	R815	A-7
C171	C-1	C526	D-4	D911	E-3	R075	C-3	R432	B-9	R823	A-8
C185	C-2	C527	D-4			R081	C-4	R433	B-9	R825	A-8
C187	C-2	C528	D-5	FB002	A-4	R082	C-4	R434	B-8	R836	A-9
C188	B-1	C529	D-5	FB004	A-5	R085	C-4	R435	B-9	R837	A-9
C189	B-1	C530	D-5	FB201	E-8	R086	D-4	R436	B-8	R917	C-8
C201	F-7	C532	D-4	FB203	F-5	R092	C-4	R437	A-8	R918	C-8
C204	E-8	C533	D-4	FB206	E-7	R093	C-5	R440	B-9	R919	C-8
C206	E-7	C534	E-5	FB506	E-5	R096	C-4	R441	C-8	R920	C-8
C209	D-5	C535	D-4	FB602	E-8	R098	C-4	R513	D-4	R932	D-8
C210	D-6	C551	G-4			R099	C-4	R514	D-4	R933	D-8
C217	E-7	C552	F-4	IC001	B-4	R101	C-4	R515	D-4		
C219	E-8	C553	G-4	IC202	F-6	R102	C-5	R522	D-4	X601	G-8
C224	E-7	C555	E-4	IC301	B-2	R103	C-5	R523	D-5	X602	G-7
C225	E-7	C557	F-4	IC402	B-8	R107	C-5	R524	D-5		
C226	E-7	C558	F-4	IC502	D-5	R113	C-5	R525	D-5		
C229	F-5	C560	F-4	IC551	F-4	R165	C-3	R532	E-4		
C230	E-6	C561	F-5	IC604	F-8	R166	C-2	R551	G-4		
C237	E-7	C562	F-5	IC801	B-6	R167	C-3	R554	G-4		
C239	F-7	C565	E-4			R170	C-3	R555	G-5		
C241	E-8	C567	F-5	L001	A-3	R175	C-1	R556	F-4		
C245	E-7	C568	F-5	L002	B-5	R183	C-2	R557	G-4		
C248	E-7	C569	F-5	L003	B-5	R184	C-2	R558	F-4		
C250	E-7	C570	F-5	L004	B-3	R201	E-6	R559	F-4		
C253	G-6	C571	F-5	L006	C-5	R203	E-8	R560	F-4		
C306	A-1	C572	G-4	L009	B-3	R206	E-8	R561	E-4		
C307	A-1	C605	G-8	L012	C-3	R207	E-6	R562	F-4		
C308	B-1	C612	E-8	L013	C-5	R209	E-6	R563	F-4		
C309	B-1	C615	E-8	L016	C-5	R212	D-6	R564	F-4		
C310	B-1	C616	E-8	L018	C-5	R213	D-6	R565	F-4		
C312	A-1	C617	E-9	L204	D-7	R214	D-6	R566	F-4		
C313	A-1	C618	E-9	L205	D-6	R215	D-6	R567	F-5		
C314	A-1	C619	E-9	L207	E-7	R216	E-6	R568	E-4		
C315	B-1	C620	E-9	L502	D-4	R217	F-7	R569	F-4		
C316	B-1	C621	E-8	L555	F-5	R218	D-6	R570	F-5		
C317	A-1	C622	E-8			R219	D-7	R571	E-4		
C318	A-1	C623	E-8	Q003	A-5	R220	D-6	R572	E-4		
C319	A-1	C624	E-8	Q024	B-4	R221	D-6	R573	E-4		
C320	A-1	C628	G-7	Q027	C-4	R222	E-7	R574	F-5		
C321	A-1	C629	G-7	Q028	C-4	R225	D-6	R575	E-4		
C322	B-1	C635	E-8	Q029	C-4	R227	E-6	R576	F-5		
C323	A-1	C636	E-8	Q031	D-4	R228	D-6	R577	E-4		

VC-214 (CAMERA PROCESSOR, Y/C PROCESSOR, FOCUS/ZOOM MOTOR DRIVE, REC/PB HEAD AMP, VIDEO/INTERFACE, IR, MODE CONTROL, SYSTEM CONTROL, AUDIO PROCESSOR) PRINTED WIRING BOARD

— Ref. No. VC-214 Board; 1,000 Series —

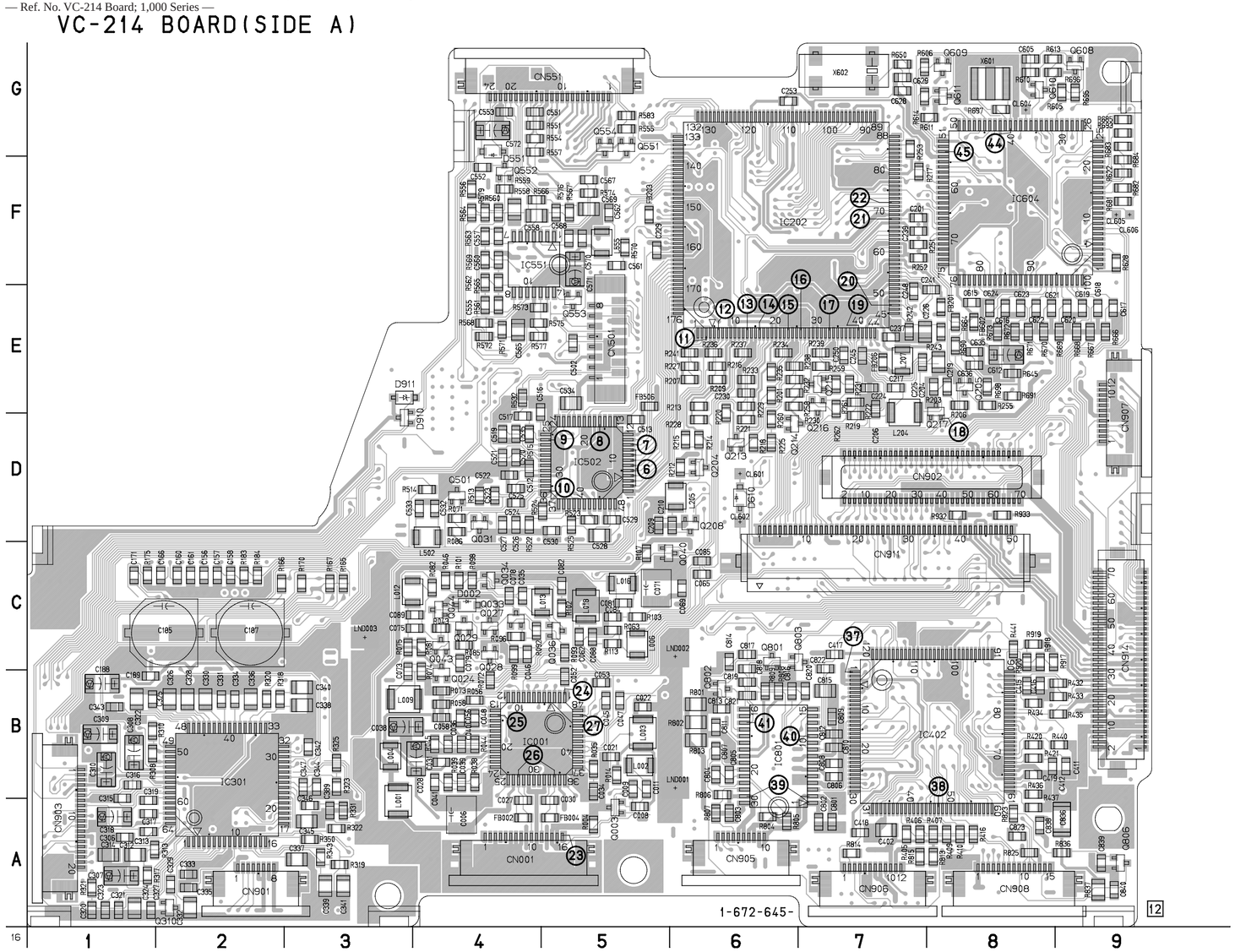

VC-214 BOARD(SIDE B)

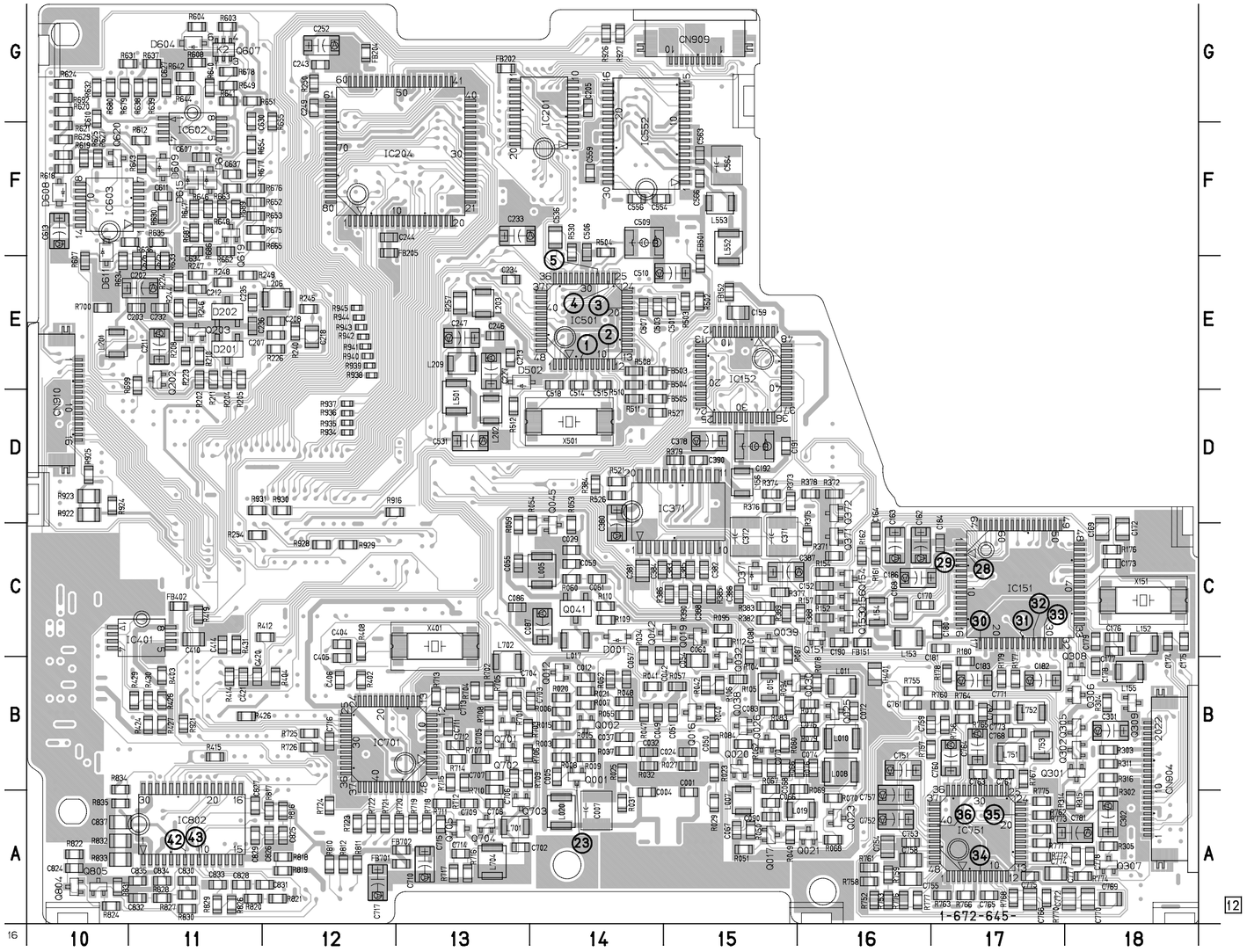

VC-214 BOARD (SIDE B)

C001	A-15	C384	C-14	C829	A-11	Q019	C-15	R095	C-15	R527	D-14	R759	A-16
C004	A-14	C385	C-15	C830	A-11	Q020	B-15	R104	B-15	R530	F-14	R760	B-17
C005	B-14	C386	C-15	C831	A-12	Q021	A-16	R105	B-15	R603	G-11	R761	A-16
C007	A-14	C387	C-15	C832	A-11	Q023	A-16	R106	B-15	R604	G-11	R762	A-17
C012	B-14	C388	C-15	C833	A-11	Q025	B-16	R109	C-14	R607	E-10	R763	A-17
C024	B-15	C390	D-15	C834	A-11	Q026	B-15	R110	C-14	R608	G-11	R764	B-17
C029	C-14	C404	C-12	C835	A-11	Q030	B-15	R112	C-15	R612	F-11	R765	A-17
C032	B-14	C405	B-12	C837	A-10	Q032	B-15	R152	C-16	R618	F-10	R765	B-17
C037	B-14	C406	B-12			Q038	B-15	R154	C-16	R619	F-10	R766	A-17
C042	C-14	C410	C-11	CN904	B-18	Q039	C-15	R157	C-16	R620	G-10	R767	B-17
C049	B-14	C414	C-11	CN909	G-15	Q041	C-14	R161	C-16	R621	F-10	R768	A-17
C050	B-15	C420	B-11	CN910	D-10	Q042	C-15	R162	C-16	R624	G-10	R770	A-17
C051	B-15	C421	B-11			Q045	C-14	R176	C-18	R625	F-10	R771	A-17
C054	C-15	C501	E-15	D001	C-14	Q151	C-16	R177	B-17	R627	F-10	R772	A-17
C055	C-13	C503	E-14	D201	E-11	Q153	C-16	R178	B-17	R629	F-10	R773	A-17
C057	B-14	C506	F-14	D202	E-11	Q154	C-16	R179	B-17	R630	F-11	R774	A-18
C059	C-14	C507	E-14	D371	C-15	Q156	C-16	R180	B-17	R631	G-11	R775	A-17
C060	B-15	C509	F-14	D611	F-10	Q202	E-11	R202	E-11	R632	G-10	R776	A-16
C061	C-14	C510	E-15	D804	G-11	Q203	E-11	R204	E-11	R633	E-11	R777	A-16
C066	A-15	C514	E-14	D808	F-10	Q301	B-18	R205	E-11	R634	E-10	R810	A-12
C067	A-15	C515	E-14	D809	F-11	Q302	B-18	R208	E-11	R635	F-11	R811	A-12
C068	B-15	C518	E-14	D814	F-11	Q305	B-18	R210	E-11	R636	F-11	R812	A-12
C070	B-15	C531	D-13	D815	F-11	Q306	B-18	R211	E-11	R637	G-11	R816	A-12
C072	B-16	C536	F-14	D902	E-13	Q307	A-18	R223	E-11	R638	G-11	R817	A-12
C074	B-16	C554	F-14			Q308	B-18	R224	E-11	R639	G-11	R818	A-12
C076	B-16	C556	F-14	FB151	C-16	Q309	B-18	R226	E-12	R640	G-11	R819	A-12
C080	C-15	C559	F-14	FB152	E-15	Q371	C-16	R240	E-12	R641	G-11	R820	A-11
C083	B-15	C563	F-15	FB202	G-13	Q372	D-16	R244	E-11	R642	G-11	R821	A-12
C086	C-13	C564	F-15	FB204	G-12	Q607	G-11	R245	E-12	R643	F-11	R822	A-10
C087	C-14	C566	F-15	FB205	F-12	Q619	F-11	R246	E-11	R644	G-11	R824	A-10
C090	A-15	C607	F-11	FB402	C-11	Q620	F-10	R247	E-11	R646	F-11	R827	A-11
C152	C-16	C610	G-10	FB501	E-15	Q701	B-13	R248	E-11	R647	F-11	R828	A-11
C159	E-15	C611	F-11	FB503	E-14	Q702	B-13	R249	E-11	R648	F-11	R828	A-11
C162	C-16	C613	F-10	FB504	E-14	Q703	A-13	R250	G-12	R649	G-11	R829	A-11
C163	C-16	C625	E-11	FB505	D-14	Q704	A-13	R254	C-11	R651	G-11	R830	A-11
C164	C-16	C626	E-11	FB701	A-13	Q705	A-13	R257	E-13	R652	F-11	R831	A-10
C168	C-16	C627	G-11	FB702	A-13	Q804	A-10	R302	A-18	R653	F-11	R832	A-10
C169	C-18	C630	F-11			Q805	A-10	R303	B-18	R654	F-11	R833	A-10
C170	C-16	C634	F-11	IC151	C-17			R304	B-18	R655	F-12	R834	A-10
C172	C-18	C637	F-11	IC152	E-15	R003	B-14	R305	A-18	R662	F-11	R835	A-10
C173	C-18	C702	A-13	IC201	G-14	R005	B-14	R311	B-18	R663	F-11	R916	D-12
C174	C-18	C703	B-14	IC204	F-13	R006	B-14	R314	A-18	R665	F-11	R921	B-11
C175	C-18	C704	B-13	IC371	D-15	R007	B-14	R315	A-18	R675	F-11	R922	D-10
C176	C-18	C705	B-13	IC401	C-11	R008	B-14	R316	B-18	R676	F-11	R923	D-10
C177	C-18	C706	B-13	IC501	E-14	R009	B-14	R371	C-16	R677	F-11	R924	D-10
C178	B-18	C707	B-13	IC552	F-14	R015	B-14	R372	D-16	R678	G-11	R925	D-10
C179	C-18	C708	A-13	IC602	F-11	R020	B-14	R373	D-15	R679	G-10	R926	G-14
C180	C-17	C710	A-13	IC603	F-10	R021	B-14	R374	D-15	R680	G-10	R927	G-14
C181	C-17	C711	B-13	IC701	B-12	R023	B-15	R375	C-16	R686	F-11	R928	C-12
C182	B-17	C712	B-13	IC751	A-17	R025	B-14	R376	D-15	R687	F-11	R929	C-12
C183	B-17	C713	B-13	IC802	A-11	R027	B-15	R377	C-15	R689	F-11	R930	D-12
C184	C-17	C714	A-13			R029	A-15	R378	D-16	R692	G-10	R931	D-11
C186	C-16	C715	A-13	L005	C-14	R031	A-14	R379	D-15	R699	E-11	R934	D-12
C190	C-16	C716	B-12	L007	A-15	R032	B-14	R382	C-15	R700	E-10	R935	D-12
C191	D-15	C717	A-12	L008	B-16	R034	C-14	R383	C-15	R701	B-13	R936	D-12
C192	D-15	C751	B-16	L010	B-16	R037	B-14	R384	D-14	R702	B-13	R937	D-12
C202	E-11	C752	A-16	L011	B-16	R040	B-15	R385	C-15	R703	B-13	R938	E-12
C203	E-11	C753	A-16	L015	B-15	R041	B-14	R386	C-15	R704	B-13	R939	E-12
C205	G-14	C754	A-16	L017	C-14	R042	B-15	R386	C-16	R705	B-13	R940	E-12
C207	E-12	C755	A-16	L019	A-16	R047	B-14	R389	C-15	R706	B-13	R941	E-12
C208	E-12	C757	A-16	L020	A-14	R048	B-14	R390	C-15	R707	B-13	R942	E-12
C211	E-11	C758	A-16	L152	C-18	R049	A-15	R390	C-15	R708	B-13	R943	E-12
C212	E-11	C759	B-17	L153	C-16	R050	A-15	R402	B-12	R709	B-14	R944	E-12
C213	E-13	C760	B-17	L154	C-16	R051	A-15	R403	B-11	R710	A-13	R945	E-12
C218	E-12	C761	B-16	L155	B-18	R052	B-14	R404	B-12	R711	A-13		
C227	E-13	C762	B-17	L156	D-15	R053	C-14	R408	C-12	R712	B-13	TH401	B-16
C232	E-11	C763	B-17	L201	E-10	R054	C-14	R412	C-12	R713	B-13		
C233	F-13	C764	B-17	L202	D-13	R055	B-14	R414	B-11	R714	B-13	X151	C-18
C234	E-13	C766	A-17	L203	E-13	R057	B-15	R415	B-11	R715	B-13	X401	C-13
C235	E-11	C767	B-17	L206	E-12	R059	C-13	R419	C-11	R716	A-13	X501	D-14
C236	E-11	C768	B-17	L209	E-13	R060	C-14	R424	B-11	R717	A-13		
C243	G-12	C769	A-18	L501	D-13	R062	B-15	R426	B-11	R718	A-13		
C244	F-12	C770	A-18	L552	F-15	R066	A-16	R427	B-11	R719	A-13		
C246	E-13	C771	B-17	L553	F-15	R066	B-16	R428	B-11	R720	A-13		
C247	E-13	C772	A-18	L701	A-13	R067	A-15	R429	B-11	R721	A-12		
C249	G-12	C773	B-17	L702	B-13	R069	A-16	R430	B-11	R722	A-12		
C252	G-12	C774	A-17	L704	A-13	R070	A-16	R431	C-11	R723	A-12		
C301	B-18	C775	A-17	L751	B-17	R076	B-16	R502	E-15	R724	A-12		
C302	A-18	C777	A-18	L752	B-17	R077	B-16	R503	E-15	R725	B-12		
C371	C-15	C778	A-18	L753	B-17	R078	B-16	R504	F-14	R726	B-12		
C372	C-15	C781	A-18			R079	B-16	R508	E-14	R752	A-16		
C378	D-15	C824	A-10	Q001	B-14	R080	B-15	R510	E-14	R753	A-16		
C380	C-14	C825	A-12	Q002	B-14	R083	B-15	R511	D-14	R755	B-16		
C381	C-14	C826	A-12	Q012	B-14	R084	B-15	R512	D-13	R756	B-17		
C382	C-15	C827	A-11	Q016	B-15	R087	C-15	R521	D-14	R757	B-17		
C383	C-15	C828	A-11	Q017	A-15	R094	B-15	R526	D-14	R758	A-16		

VC-214 BOARD (1/10)

① IC501 ⑤ CAMERA REC/PB
28.374 MHz, 3.0Vp-p

⑦ IC502 ⑩ CAMERA REC
72 nsec, 2.9Vp-p

② IC501 ⑪ CAMERA REC/PB
14.187 MHz, 3.0Vp-p

⑦ IC502 ⑩ PB
72 nsec, 2.9Vp-p

③ IC501 ㉑ CAMERA REC
50 nsec, 3.0Vp-p

⑧ IC502 ⑯ CAMERA REC/PB
14.187 MHz, 2.9Vp-p

④ IC501 ㉘ CAMERA REC
H, 7.0Vp-p

⑨ IC502 ㉘ CAMERA REC
H, 1.2Vp-p

⑤ IC501 ㉘ CAMERA REC
H, 7.0Vp-p

⑩ IC502 ㊱ PB
H, 0.3Vp-p

⑥ IC502 ② – ⑨ CAMERA REC/PB
72 nsec, 2.9Vp-p

For schematic diagram
• Refer to page 4-11 for printed wiring board.

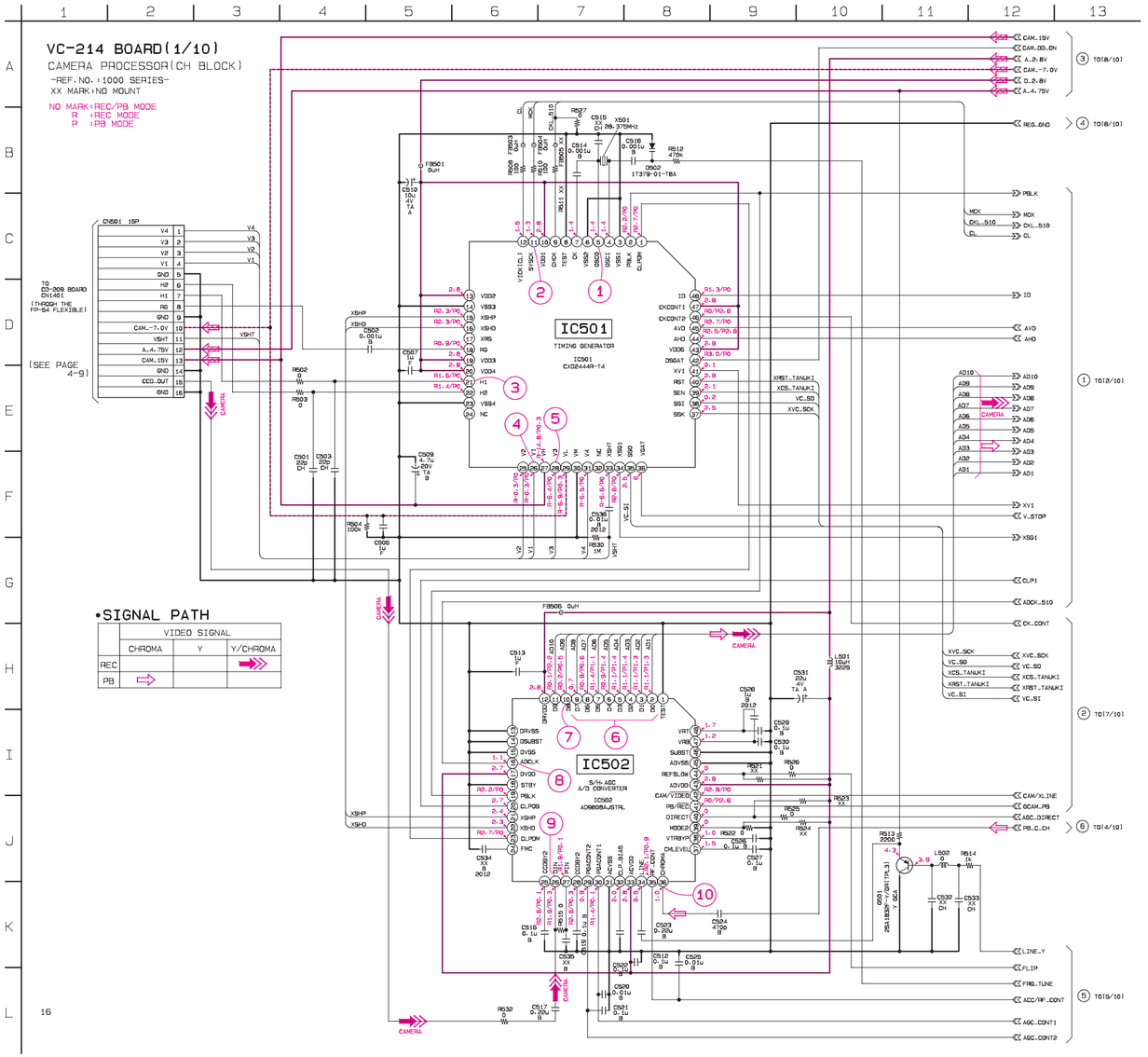

For schematic diagram
- Refer to page 4-11 for printed wiring board.
- Refer to page 4-23 for waveforms.

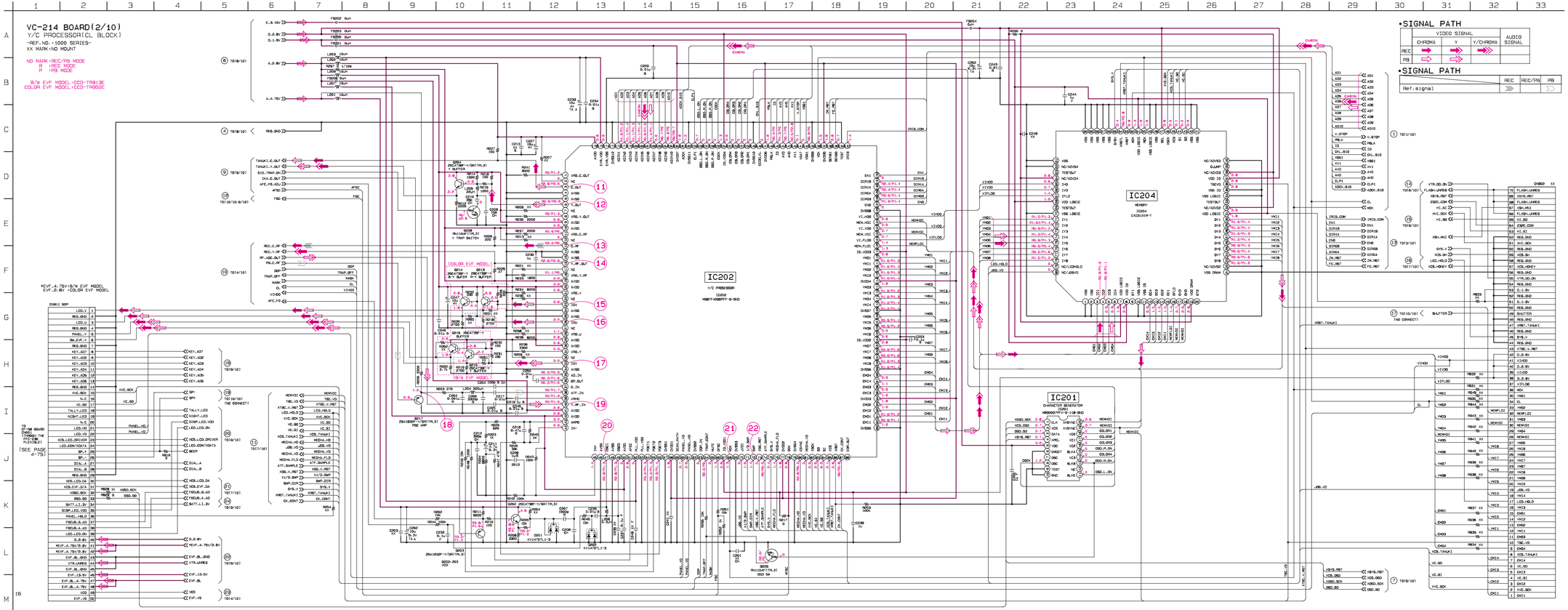

VC-214 BOARD (2/10)

(11) IC202 ③ CAMERA REC/PB 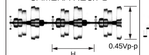	(17) IC202 ㊸ CAMERA REC/PB
(12) IC202 ⑥ CAMERA REC/PB	(18) Q217 ⑥ PB
(13) IC202 ⑬ CAMERA REC	(19) IC202 ㊻ PB
(14) IC202 ⑭ CAMERA REC 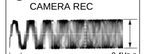	(20) IC202 ㊼ PB
(15) IC202 ㉓ CAMERA REC/PB 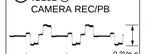	(21) IC202 ㊽ CAMERA REC/PB 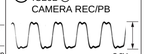
(16) IC202 ㉘ CAMERA REC/PB	(22) IC202 ㊼ CAMERA REC/PB

For schematic diagram
• Refer to page 4-11 for printed wiring board.

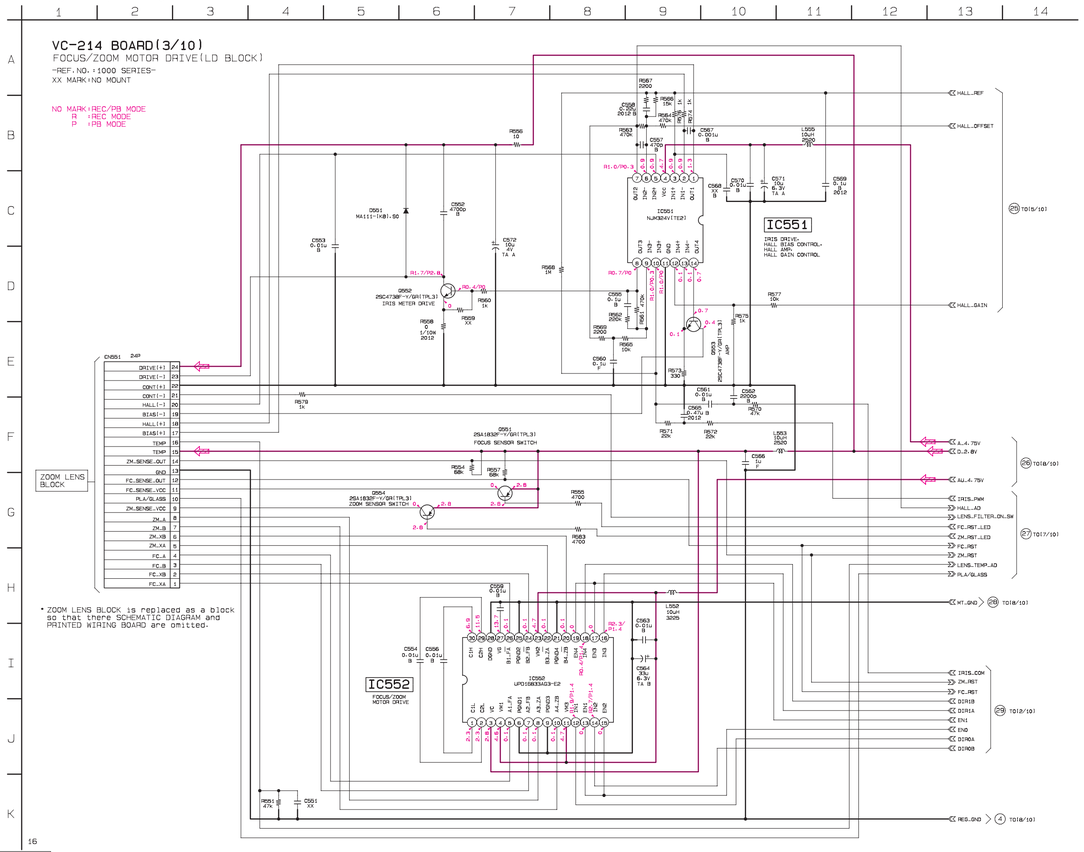

FOCUS/ZOOM MOTOR DRIVE
VC-214 (3/10)

For schematic diagram

- Refer to page 4-11 for printed wiring board.
- Refer to page 4-30 for waveforms.

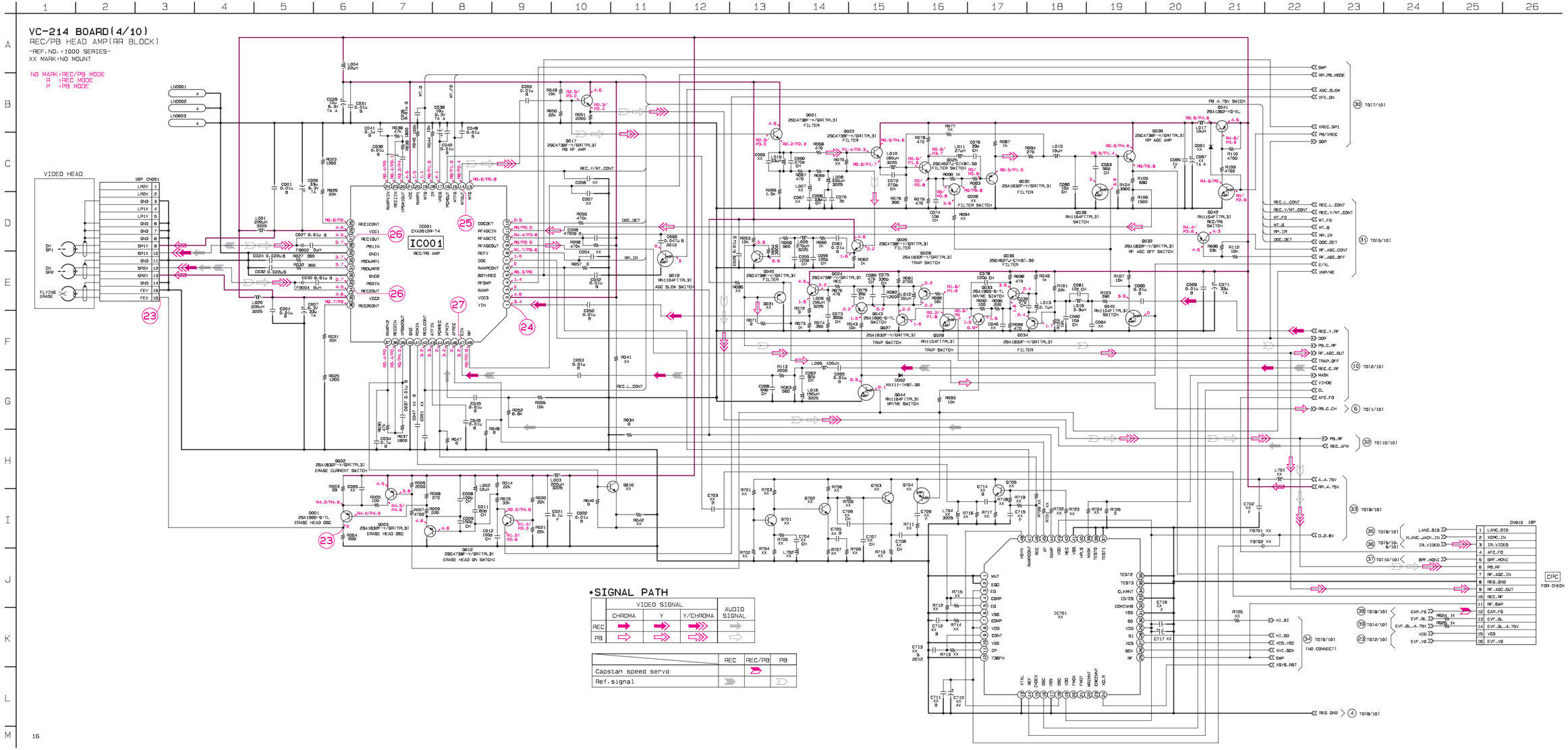

For schematic diagram
• Refer to page 4-11 for printed wiring board.

VC-214 BOARD (4/10)

(23) CN001 ⑱, Q001 ⓒ
CAMERA REC

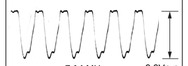

(24) IC001 ①
CAMERA REC

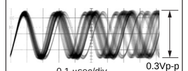

(25) IC001 ⑭
PB

(26) IC001 ㉗, ㉞
CAMERA REC

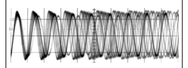

(27) IC001 ㊼
CAMERA REC

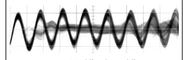

VC-214 BOARD (5/10)

(28) IC151 ③
CAMERA REC/PB

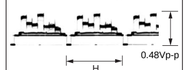

(29) IC151 ⑤
CAMERA REC/PB

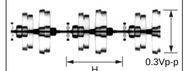

(30) IC151 ⑰
CAMERA REC/PB

(31) IC151 ㉕
CAMERA REC/PB

(32) IC151 ㉗
CAMERA REC/PB
IR ON

(33) IC151 ㉘
CAMERA REC/PB

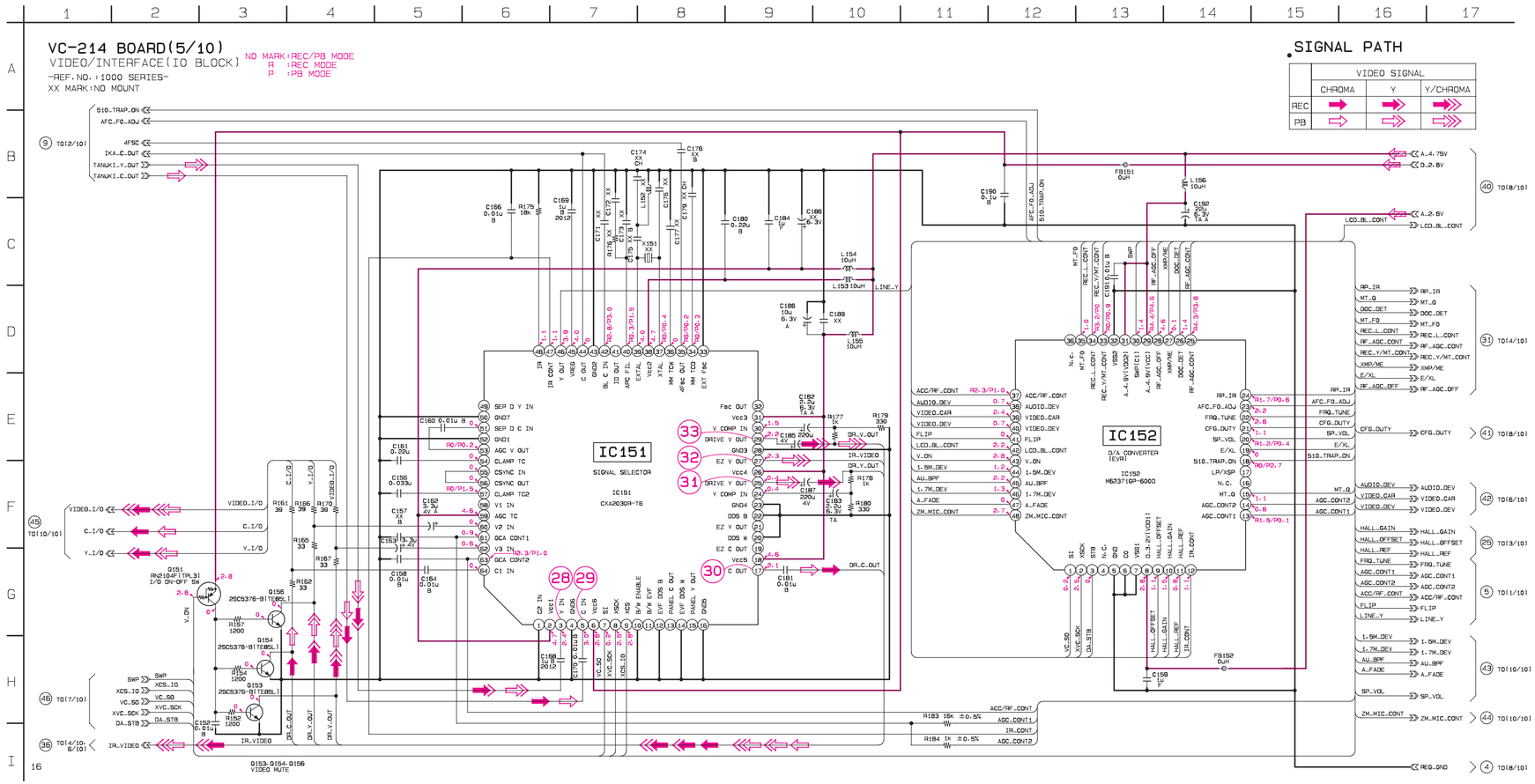

For schematic diagram

• Refer to page 4-11 for printed wiring board.

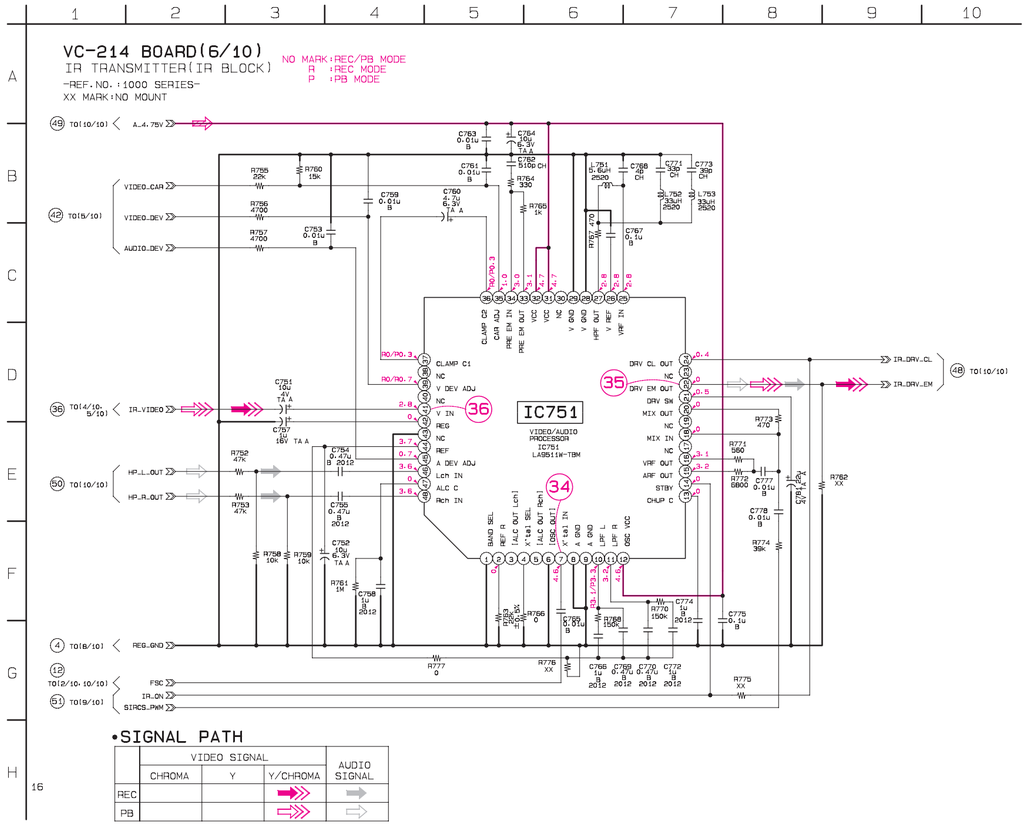

VC-214 BOARD (6/10)

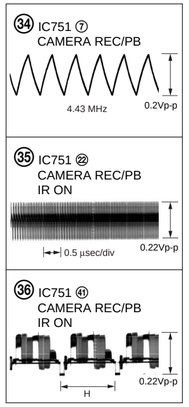

•SIGNAL PATH

	VIDEO SIGNAL			AUDIO SIGNAL
	CHROMA	Y	Y/CHROMA	
REC			⇒	→
PB			⇨	→

VC-214 BOARD (7/10)

CAMERA REC/PB

(37) IC402 ①

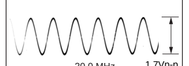

(38) IC402 ㊼

For schematic diagram

• Refer to page 4-11 for printed wiring board.

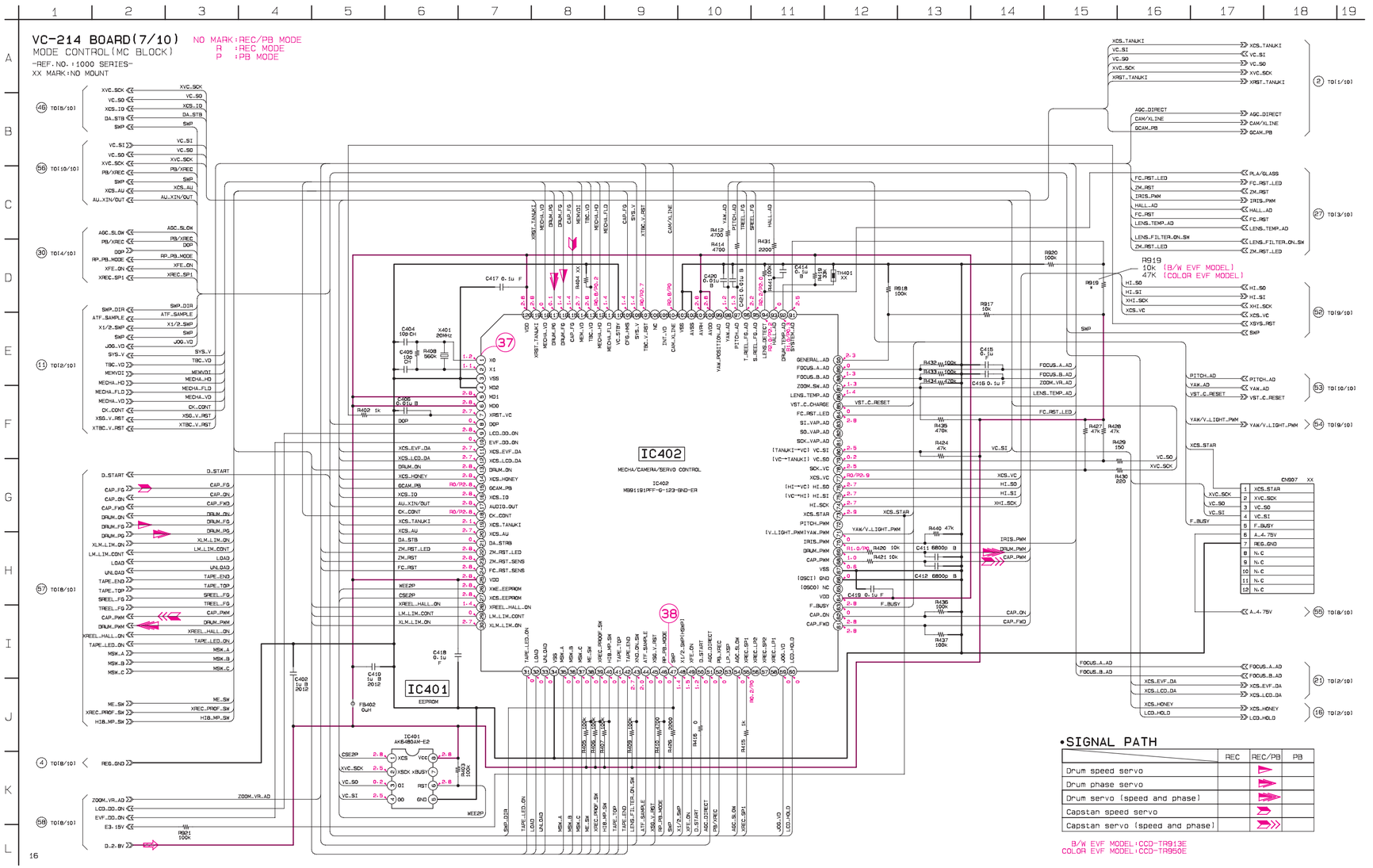

For schematic diagram
• Refer to page 4-11 for printed wiring board.

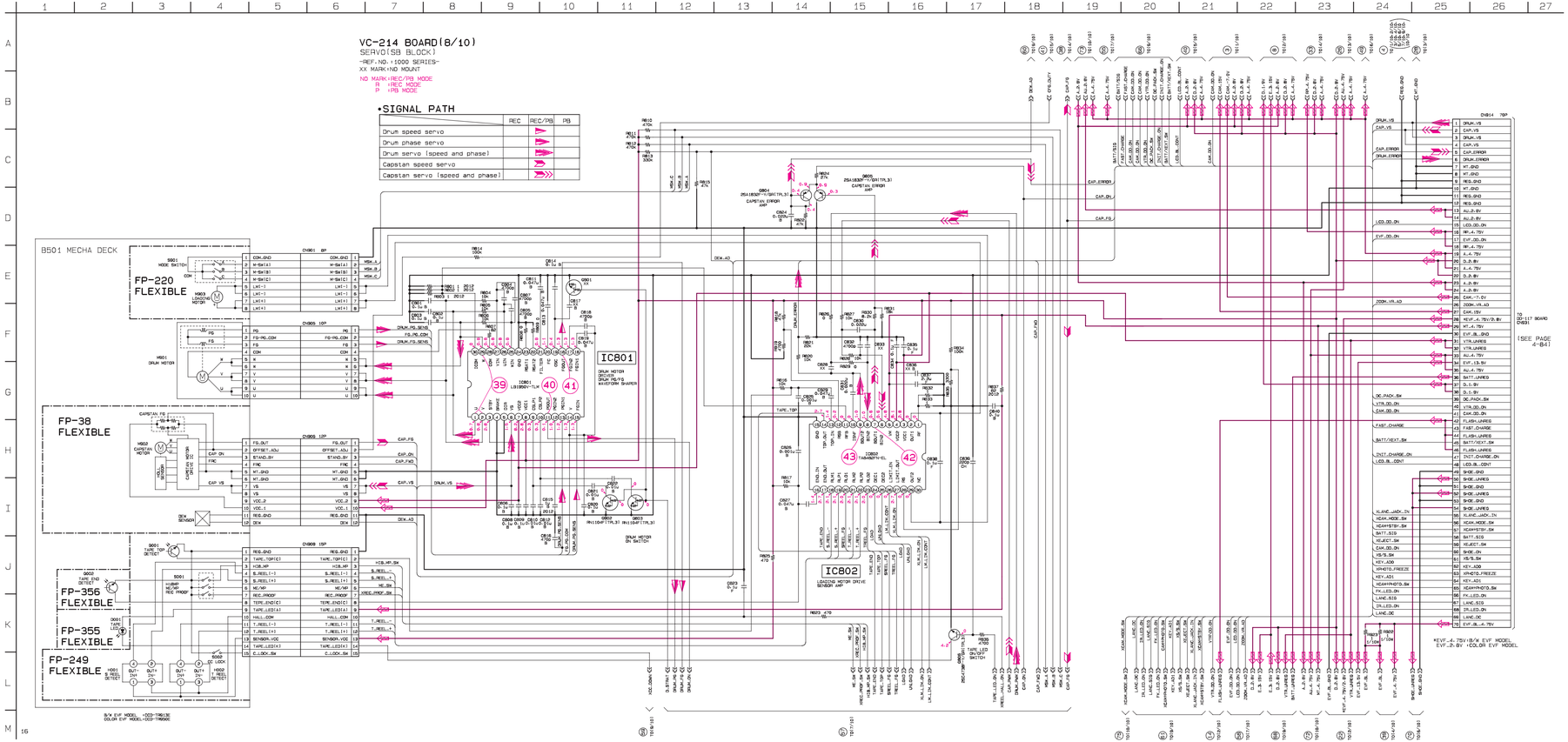

VC-214 BOARD (8/10)
CAMERA REC/PB

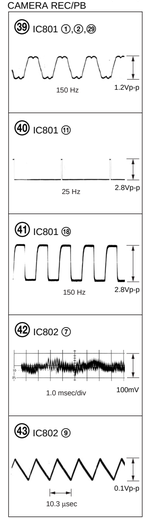

FP-249 (S/T REEL SENSOR), FP-356 (TOP SENSOR), FP-355 (TAPE LED) FLEXIBLE BOARD
— Ref. No. FP-249, 356, 355 FLEXIBLE board; 5,000 series —

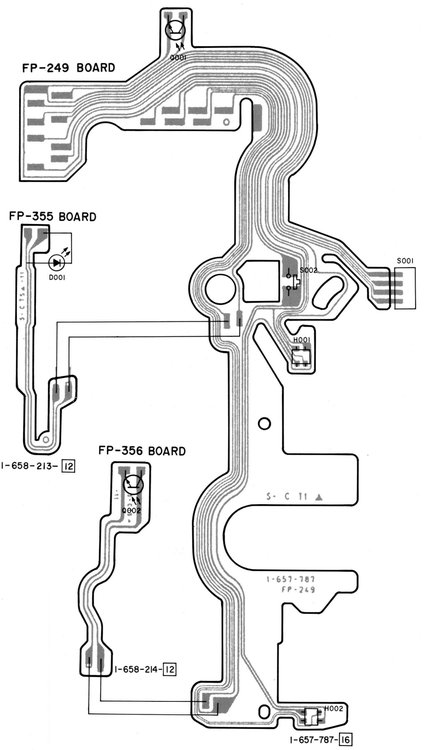

VL-25 (VIDEO LIGHT) PRINTED WIRING BOARD
— Ref. No. VL-25 Board; 2,000 Series —

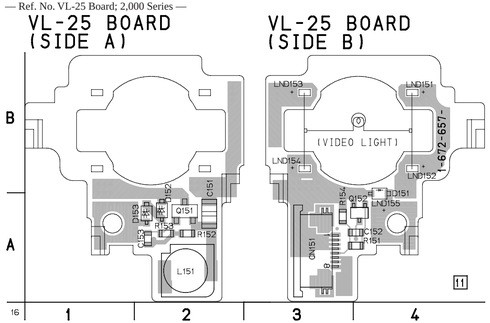

For printed wiring boards
• Chip parts

Transistor

There are few cases that the part printed on this diagram isn't mounted in this model.

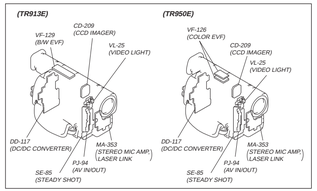

VL-25 BOARD

C151 A-2
C152 A-3
C153 A-2

CN151 A-3

D151 A-5
D152 A-2
D153 A-2

L151 A-2

Q151 A-2
Q152 A-4

R151 A-4
R152 A-2
R153 A-2
R154 A-3

VC-214 BOARD (9/10)
CAMERA REC/PB

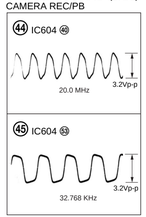

For schematic diagram
• Refer to page 4-11 for printed wiring board.

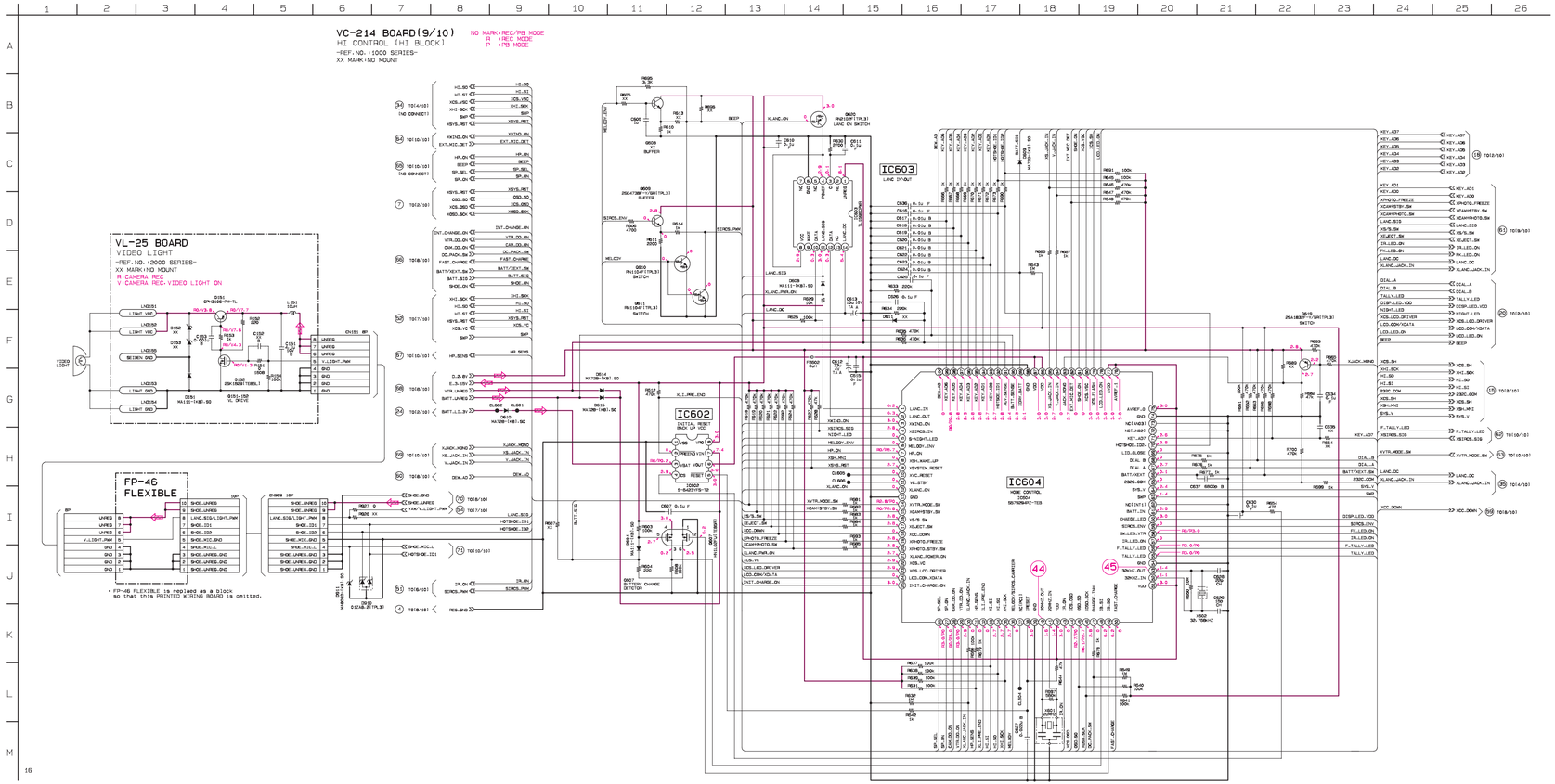

For schematic diagram
• Refer to page 4-11 for printed wiring board.

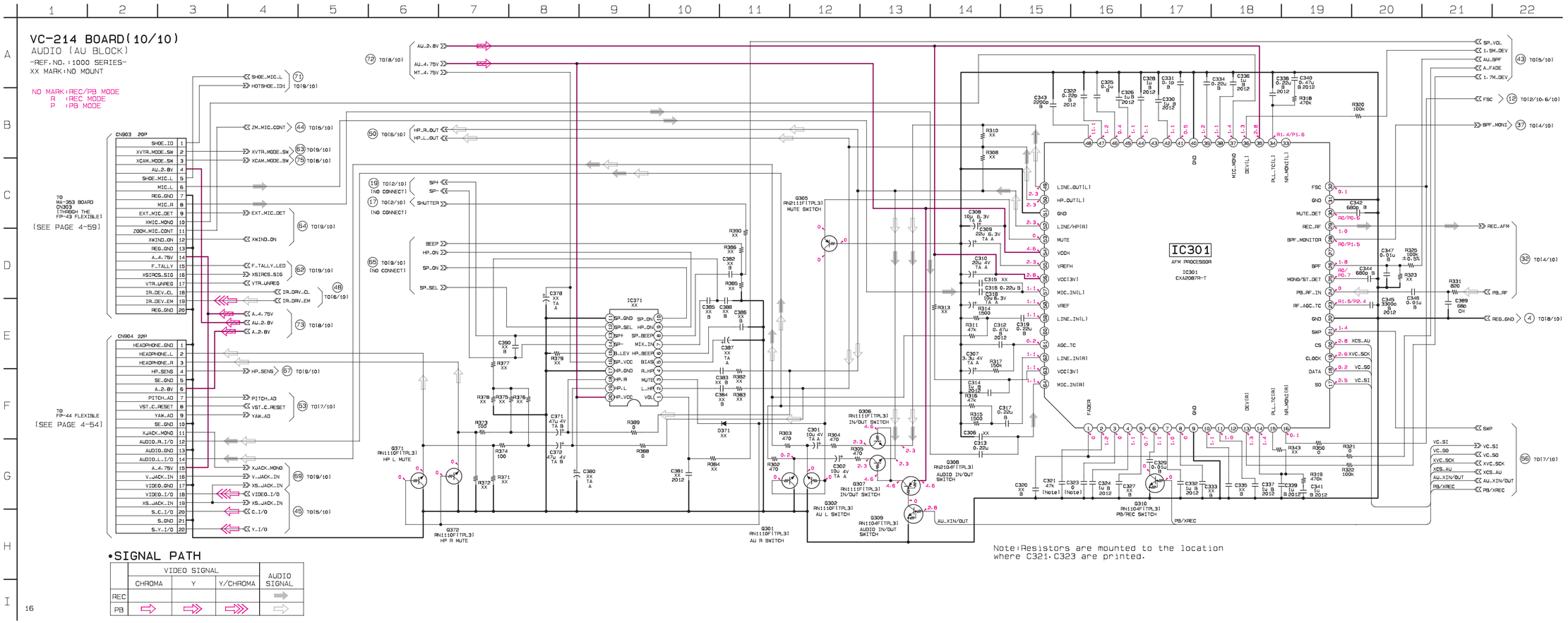

•SIGNAL PATH

	VIDEO SIGNAL			AUDIO SIGNAL
	CHROMA	Y	Y/CHROMA	
REC				⇨
PB	⇨	⇨	⇨	⇨

SE-85 (STEADY SHOT), PJ-94 (AV IN/OUT) PRINTED WIRING BOARDS

— Ref. No. SE-85, PJ-94 Board; 2,000 Series —

SE-85 BOARD

C451 B-5
C452 D-6
C453 C-2
C454 E-2
C457 C-6
C458 C-6
C459 C-6
C460 D-3
C461 C-6
C462 C-3
C463 D-6
C464 B-6
C465 B-6
C466 C-5
C467 A-2
C468 A-2
C469 A-2
C470 A-2

CN451 A-3

D451 A-2
D452 A-2

IC451 C-6

J451 A-1

L451 B-2
L453 A-2
L454 A-2

R451 B-5
R452 D-6
R453 C-6
R454 B-5
R457 C-6
R458 C-6
R458 C-6
R459 C-6
R460 C-5
R461 B-6

SE451 B-3
SE452 E-3

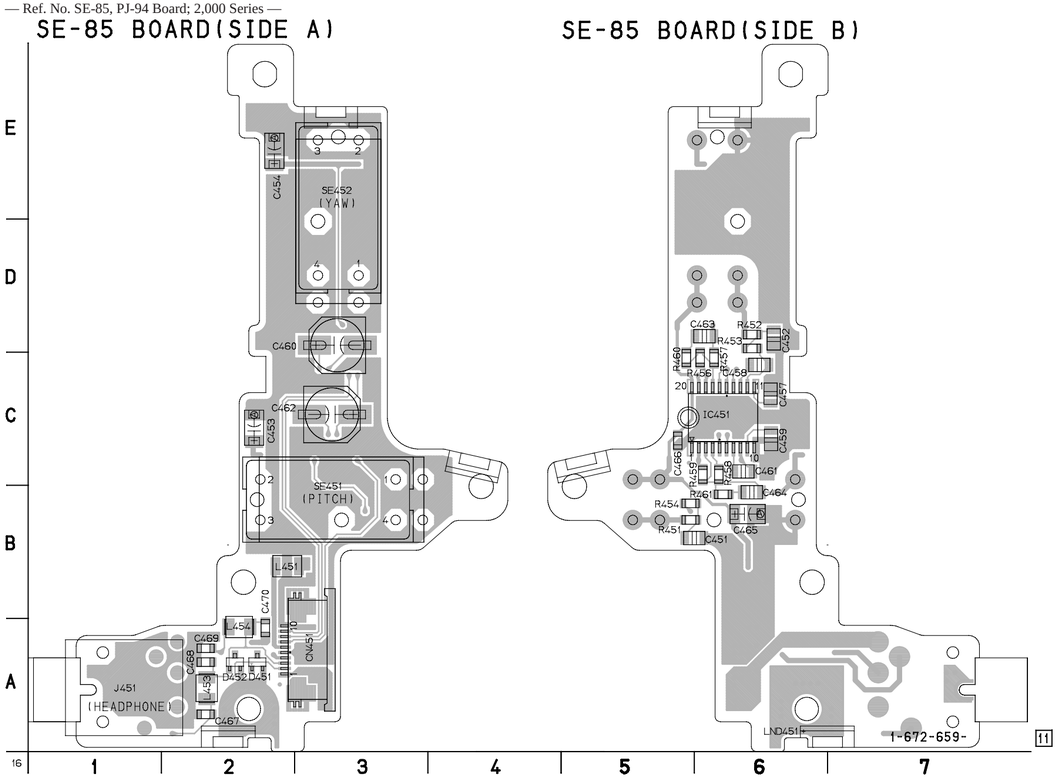

PJ-94 BOARD

C101 C-4
C102 D-4
C103 B-4
C104 C-4
C105 A-4
C106 B-4
C107 B-4
C108 A-4
C109 E-4
C110 E-4
C111 A-4

CN101 C-5

D101 A-4
D102 C-5
D103 C-5
D104 E-4
D105 E-4
D106 E-4

J101 E-1

L101 C-4
L102 C-5
L103 B-4
L104 B-4

Q101 E-4
Q102 D-4

R101 D-5
R102 D-4
R103 D-4
R104 D-4
R105 D-4
R106 E-4
R107 E-4
R108 E-5
R109 C-4

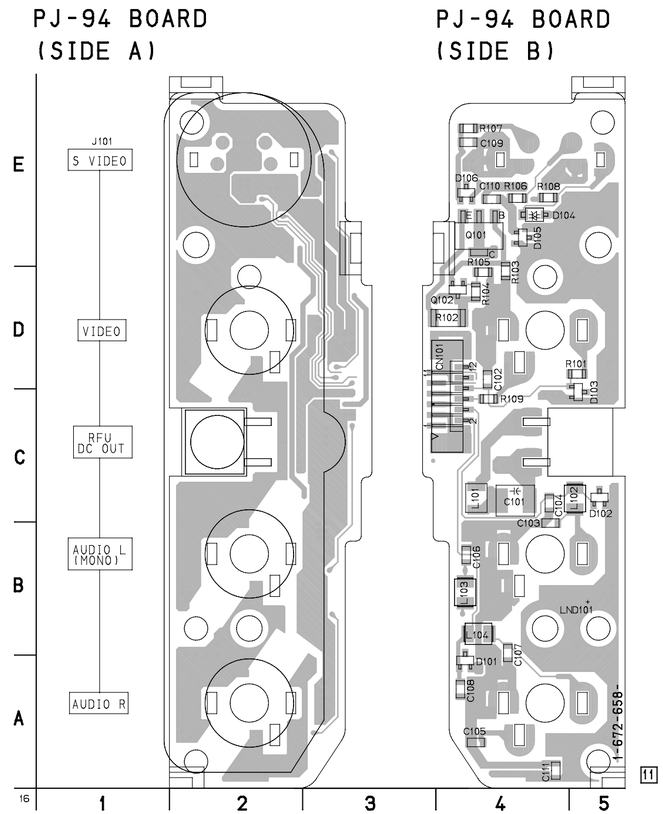

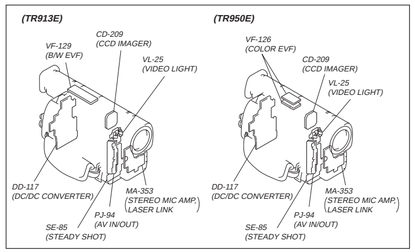

For printed wiring boards

• Chip parts

Transistor Diode

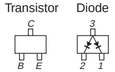

There are few cases that the part printed on this diagram isn't mounted in this model.

PJ-94 BOARD
AV IN/OUT
-REF.NO.:2000 SERIES-
XX MARK:NO MOUNT
NO MARK:REC/PB MODE

J101
S VIDEO
VIDEO
RFU DC OUT
AUDIO L(MONO)
AUDIO R

Q101 2SB798-T1-DLDK
Q102 2SC4738F-Y/GR(TPL3)
L101 1uH
L102 100uH
L103 100uH
L104 100uH
C101 47u 6.3V
C102 XX
C103 0.001u B
C104 0.001u B
C105 0.001u B
C106 0.001u B
C107 0.001u B
C108 0.001u B
C109 XX
C110 XX
C111 XX
R101 0
R102 3.3 1/6W
R103 5600
R104 820
R105 18k
R106 0
R107 0
R108 1k
R109 1k
D101 01ZA8.2(TPL3)
D102 01ZA8.2(TPL3)
D103 01ZA8.2(TPL3)
D104 MA8082-(K8).SO
D105 01ZA8.2(TPL3)
LND101 GND

•SIGNAL PATH

	VIDEO SIGNAL			AUDIO SIGNAL
	CHROMA	Y	Y/CHROMA	
REC	➡	⇒	⇛	
PB	⇨	⇨	⇨	⇨

CN101 12P

12	S_Y_I/O	S_Y_I/O	12
11	S_GND	S_GND	11
10	S_C_I/O	S_C_I/O	10
9	XS_JACK_IN	XS_JACK_IN	9
8	VIDEO_I/O	VIDEO_I/O	8
7	VIDEO_GND	VIDEO_GND	7
6	V_JACK_IN	V_JACK_IN	6
5	A_4.75V	A_4.75V	5
4	AUDIO_L_I/O	AUDIO_L_I/O	4
3	AUDIO_GND	AUDIO_GND	3
2	AUDIO_R_I/O	AUDIO_R_I/O	2
1	XJACK_MONO	XJACK_MONO	1

FP-44 FLEXIBLE

22	S_Y_I/O	S_Y_I/O	22
21	S_GND	S_GND	21
20	S_C_I/O	S_C_I/O	20
19	XS_JACK_IN	XS_JACK_IN	19
18	VIDEO_I/O	VIDEO_I/O	18
17	VIDEO_GND	VIDEO_GND	17
16	V_JACK_IN	V_JACK_IN	16
15	A_4.75V	A_4.75V	15
14	AUDIO_L_I/O	AUDIO_L_I/O	14
13	AUDIO_GND	AUDIO_GND	13
12	AUDIO_R_I/O	AUDIO_R_I/O	12
11	XJACK_MONO	XJACK_MONO	11
10	SE_GND	SE_GND	10
9	YAW_AD	YAW_AD	9
8	VST_C_RESET	VST_C_RESET	8
7	PITCH_AD	PITCH_AD	7
6	A_2.8V	A_2.8V	6
5	SE_GND	SE_GND	5
4	HP_SENSE	HP_SENSE	4
3	HEADPHONE_R	HEADPHONE_R	3
2	HEADPHONE_L	HEADPHONE_L	2
1	HEADPHONE_GND	HEADPHONE_GND	1

TO VC-214 BOARD (10/10) CN904
(SEE PAGE 4-47)

SE-85 BOARD
STEADY SHOT
-REF.NO.:2000 SERIES-
XX MARK:NO MOUNT
NO MARK:REC/PB MODE

SE451 PITCH SENSOR
SE452 YAW SENSOR
IC451 BUFFER UPC6756GH-EAJG-E2
J451 (HEADPHONES)

C451 0.1u B 2012
C452 0.1u B 2012
C453 22u 4V TA A
C454 22u 4V TA A
C457 0.056u B
C458 0.056u B
C459 0.056u B
C460 22u 6.3V
C461 0.056u B
C462 22u 6.3V
C463 XX B 2012
C464 0.33u B 2012
C465 10u 4V TA A
C466 0.01u B
C467 0.001u B
C468 0.001u B
C469 0.001u B
C470 0.001u B
L451 10uH 2520
L453 100uH 2520
L454 100uH 2520
R451 22k
R452 22k
R453 22k
R454 22k
R456 1M
R457 10k
R458 10k
R459 1M
R460 XX
R461 15k
D451 01ZA8.2(TPL3)
D452 01ZA8.2(TPL3)
LND451 GND

CN451 10P

10	SE_GND	SE_GND	10
9	YAW_AD	YAW_AD	9
8	VST_C_RESET	VST_C_RESET	8
7	PITCH_AD	PITCH_AD	7
6	A_2.8V	A_2.8V	6
5	SE_GND	SE_GND	5
4	HP_SENSE	HP_SENSE	4
3	HEADPHONE_R	HEADPHONE_R	3
2	HEADPHONE_L	HEADPHONE_L	2
1	HEADPHONE_GND	HEADPHONE_GND	1

MA-353 (STEREO MIC AMP, LASER LINK) PRINTED WIRING BOARD

— Ref. No. MA-353 Board; 2,000 Series —

MA-353 BOARD

C301	A-6	J301	B-1
C302	A-7		
C303	B-5	L301	B-7
C304	A-5		
C305	B-6	Q301	A-5
C306	B-4	Q302	B-6
C333	C-8	Q303	B-6
C334	C-8	Q304	A-7
C335	C-8	Q305	A-5
C336	D-8		
C337	C-8	R301	A-5
C338	C-8	R302	B-5
C339	C-7	R303	A-5
C340	C-8	R304	B-6
C341	C-2	R305	B-6
C342	C-8	R306	B-4
C343	C-7	R307	B-3
C344	C-1	R308	D-8
C345	C-7	R309	D-8
C346	D-8	R310	A-7
C347	C-2	R311	B-5
C348	D-7	R312	A-6
C349	D-7	R313	A-5
C350	D-2	R314	B-5
C351	D-8	R315	A-5
C352	D-8	R321	C-1
C353	D-8	R322	B-7
C354	D-7	R323	B-8
C355	D-2	R324	B-2
C356	C-7	R335	C-8
C357	C-7	R336	C-8
C358	C-2	R337	C-8
C359	C-2	R338	C-8
C360	C-7	R339	C-2
C361	C-7	R340	C-7
C362	D-2	R341	C-2
C363	D-2	R342	C-2
C364	D-2	R343	C-2
C365	D-2	R344	C-2
C366	D-2	R345	D-7
C367	D-2	R346	C-7
C368	D-2	R347	D-8
C369	C-7	R348	D-2
C370	D-2	R349	D-2
C371	C-6	R350	D-2
C372	C-6	R351	D-2
C374	C-6	R352	C-7
C375	D-2	R353	D-2
C376	C-7	R354	D-2
C377	A-8	R355	D-2
C378	D-2	R357	D-2
		R358	D-2
CN301	B-6	R358	D-2
CN302	B-7	R359	C-7
CN303	B-5	R360	C-7
		R361	D-2
D301	A-3	R362	D-2
D302	A-3	R363	D-2
D303	B-2	R364	C-2
D305	B-4	R365	C-2
D307	D-2	R366	C-2
D308	B-4	R367	C-2
D309	A-3	R368	D-2
D321	C-1	R369	C-2
D322	A-2		
D323	A-7	S301	D-1
		S302	D-7
F301	A-6	S303	C-6
IC301	A-4		
IC322	C-7		

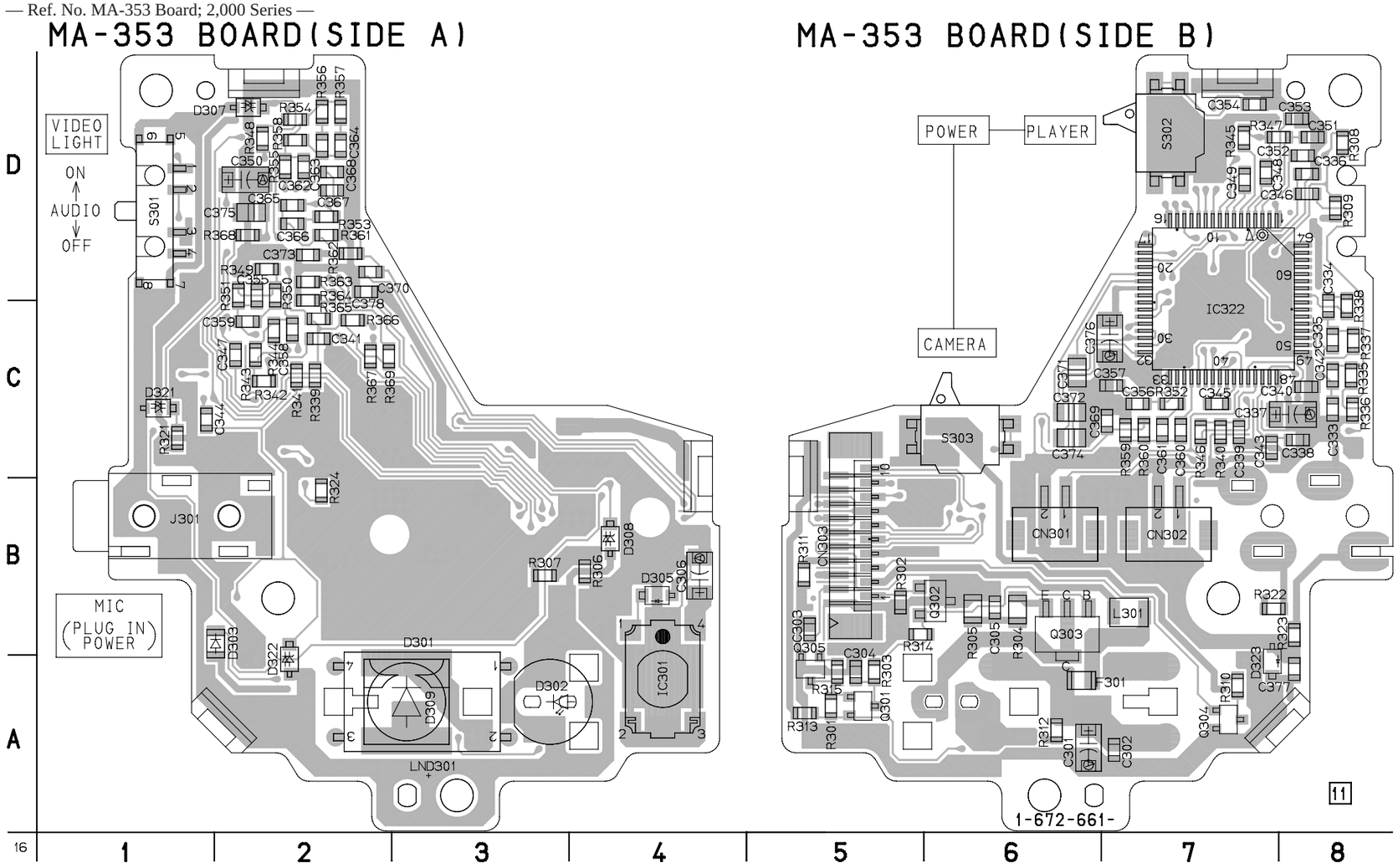

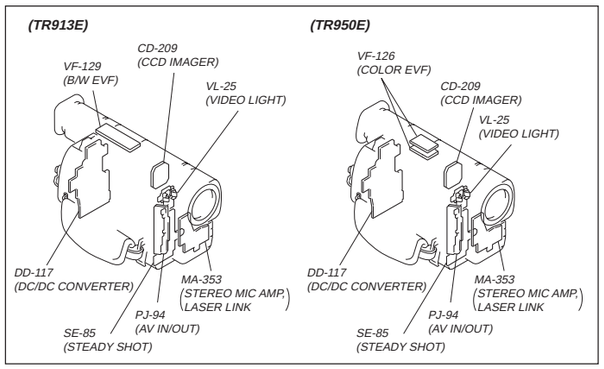

For printed wiring boards

- Chip parts

Transistor

There are few cases that the part printed on this diagram isn't mounted in this model.

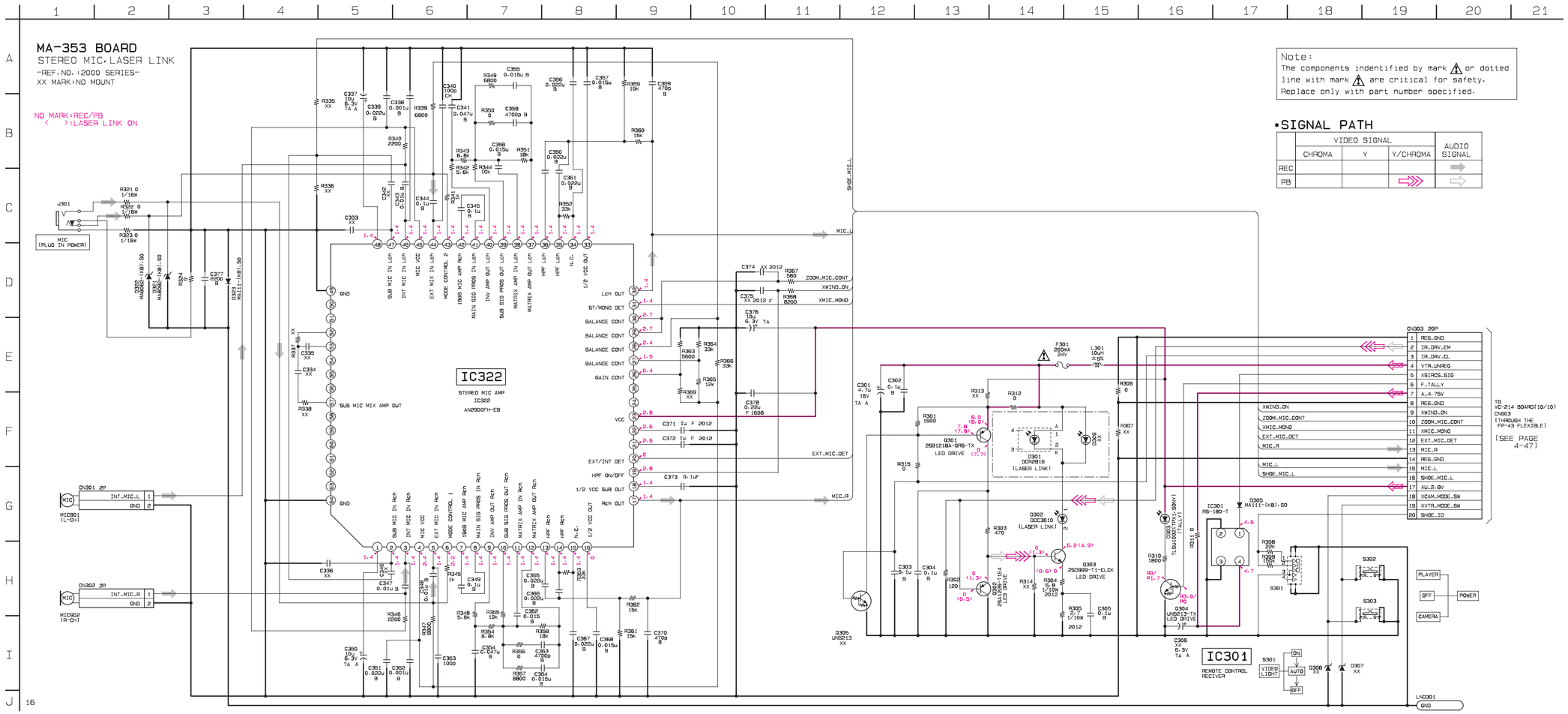
MA-353 BOARD
STEREO MIC, LASER LINK
-REF. NO. :2000 SERIES-
XX MARK:NO MOUNT
NO MARK:REC/PB
( ):LASER LINK ON
Note:
The components indentified by mark ⚠ or dotted line with mark ⚠ are critical for safety.
Replace only with part number specified.
•SIGNAL PATH
VIDEO SIGNAL
CHROMA
Y
Y/CHROMA
AUDIO SIGNAL
REC
PB
IC322
STEREO MIC AMP
IC302
AN2900FH-EB
IC301
REMOTE CONTROL RECIVER
SUB MIC MIX AMP OUT
MIC (PLUG IN POWER)
MIC801 (L-CH)
MIC802 (R-CH)
CN303 20P
TO VC-214 BOARD(10/10) CN903 (THROUGH THE FP-43 FLEXIBLE)
(SEE PAGE 4-47)
REG_GND
IR_DRV_EM
IR_DRV_CL
VTR_UNREG
XBIRCS_SIG
F_TALLY
A_4.75V
REG_GND
XWIND_ON
ZOOM_MIC_CONT
XMIC_MONO
EXT_MIC_DET
MIC_R
REG_GND
MIC_L
SHOE_MIC_L
AU_2.8V
XCAM_MODE_SW
XVTR_MODE_SW
SHOE_ID
PLAYER
OFF
POWER
CAMERA
VIDEO LIGHT
AUTO
ON
OFF
LN0301
GND

VF-126 BOARD

C4501	A-7	D4601	D-8	R4524	B-8
C4502	A-2	D4602	D-1	R4525	B-8
C4503	A-8	D4801	E-4	R4526	B-8
C4504	A-8	D4802	F-6	R4528	A-7
C4505	A-8			R4602	D-8
C4506	A-8	IC4501	A-8	R4604	D-8
C4507	A-8	IC4502	A-1	R4605	D-8
C4508	B-8	IC4601	D-1	R4606	D-1
C4509	B-7	IC4602	D-7	R4607	D-8
C4510	B-8	IC4603	D-8	R4608	D-2
C4511	B-8			R4609	D-8
C4512	B-1	L4501	A-2	R4610	D-8
C4513	B-2	L4502	B-7	R4611	D-1
C4514	B-7	L4601	C-7	R4612	D-1
C4515	A-7	L4602	C-1	R4613	D-8
C4516	B-8	L4603	D-8	R4614	D-8
C4517	B-8	L4801	E-6	R4615	D-8
C4601	D-8	L4802	E-5	R4616	D-1
C4602	C-2			R4617	D-2
C4603	D-8	ND4801	E-4	R4618	D-2
C4604	D-8			R4619	D-7
C4605	D-2	Q4501	A-1	R4620	E-1
C4606	D-1	Q4601	C-2	R4621	D-2
C4607	D-1	Q4602	C-1	R4622	D-2
C4608	D-8	Q4603	C-2	R4623	D-2
C4609	D-8	Q4604	C-1	R4624	D-2
C4610	C-7	Q4605	D-1	R4625	D-2
C4611	D-8	Q4801	F-6	R4626	D-2
C4612	D-2			R4627	D-2
C4613	D-1	R4501	A-1	R4629	D-2
C4614	D-1	R4502	A-1	R4630	D-1
C4615	D-1	R4503	A-8	R4631	D-1
C4616	D-1	R4504	A-7	R4632	D-1
C4617	D-2	R4505	A-7	R4634	D-1
C4618	D-1	R4506	A-7	R4635	D-8
C4619	D-2	R4507	A-7	R4636	D-8
C4620	D-2	R4508	A-7	R4637	D-8
C4621	D-7	R4509	A-9	R4638	D-1
C4622	D-2	R4510	A-7	R4638	D-8
C4623	D-2	R4511	A-7	R4639	D-8
C4624	D-7	R4512	A-8	R4801	E-6
C4625	D-7	R4513	A-7	R4802	E-6
C4626	C-7	R4514	A-7		
C4801	E-6	R4515	A-7	T4801	F-5
C4802	E-5	R4516	A-7		
C4803	E-5	R4517	A-7		
C4804	E-6	R4518	B-7		
		R4519	B-7		
CN4501	A-1	R4520	A-7		
CN4602	D-2	R4521	B-7		
		R4522	A-7		

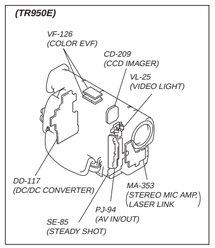

For printed wiring boards

- This board is four-layer print board. However, the patterns of layers two and three have not been included in the diagram.
- Chip parts

Transistor Diode

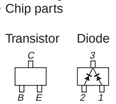

There are few cases that the part printed on this diagram isn't mounted in this model.

VF-126 (COLOR EVF) PRINTED WIRING BOARD

— Ref. No. VF-126 Board; 20,000 Series —

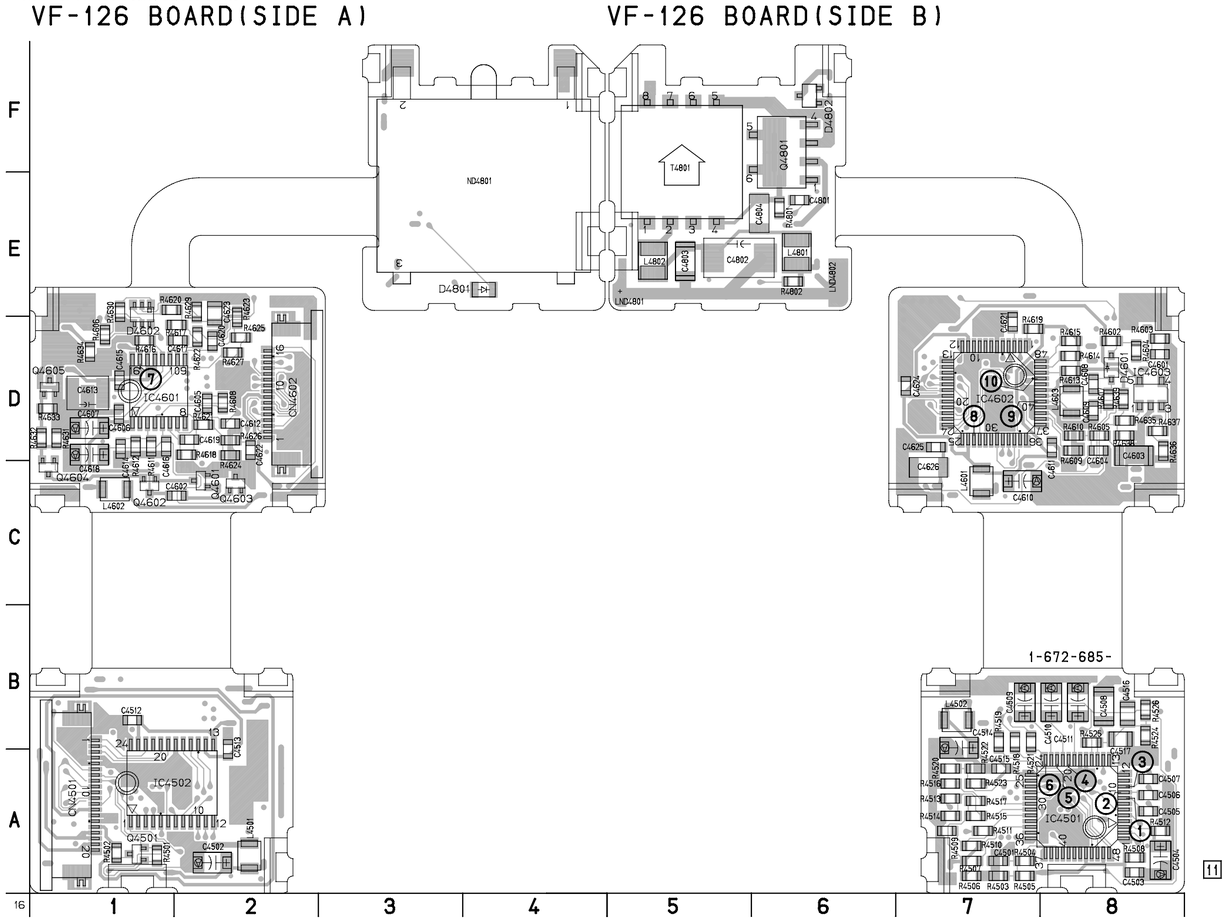

VF-126 BOARD
CAMERA REC/PB

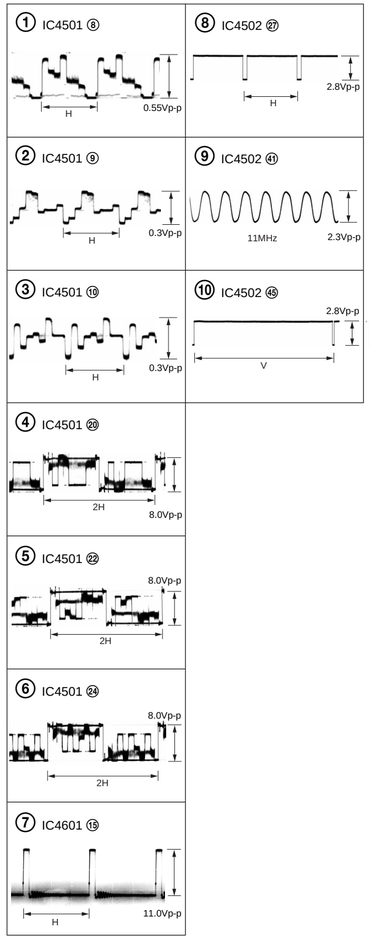

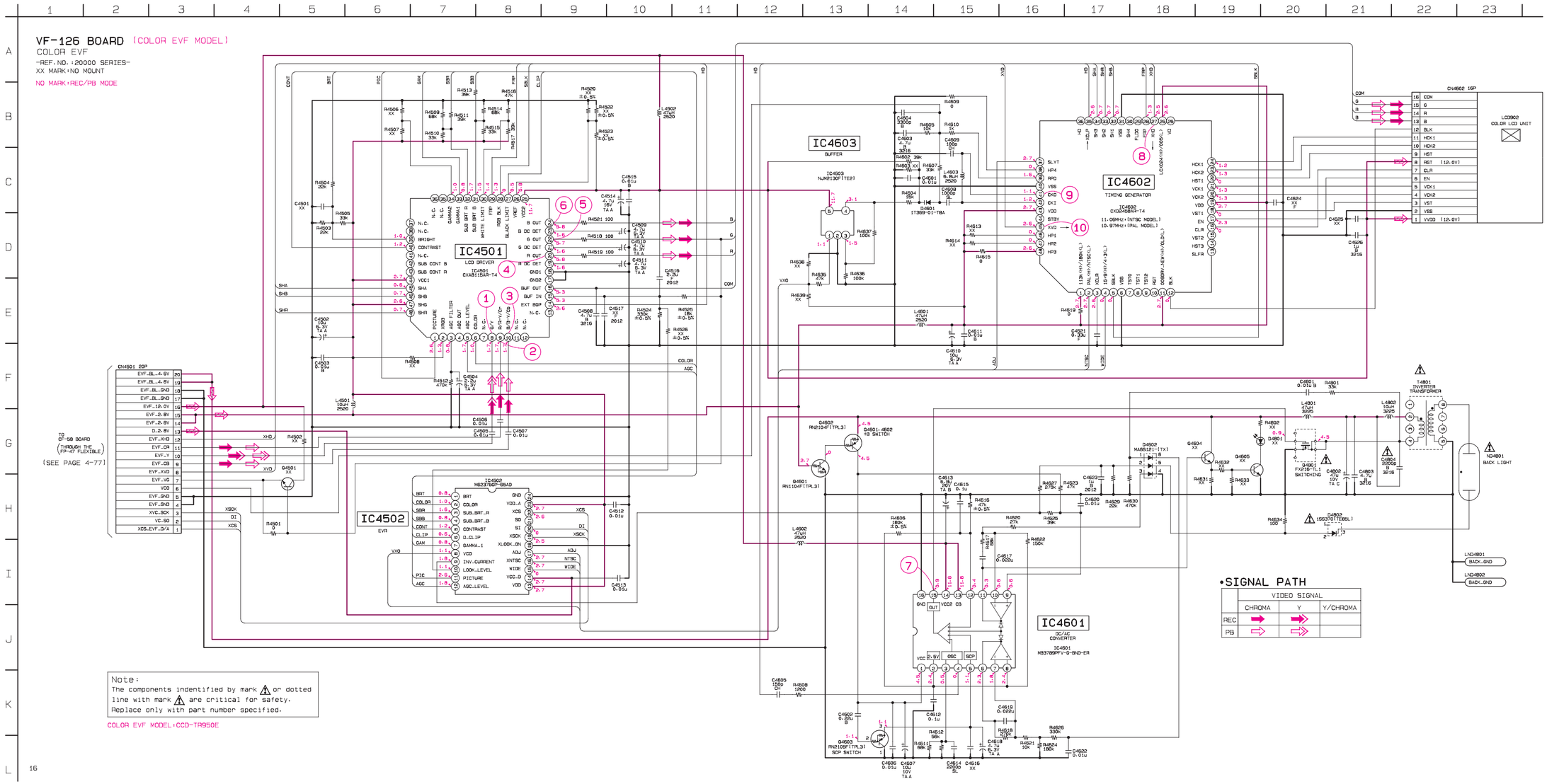
VF-126 BOARD (COLOR EVF MODEL)
COLOR EVF
-REF.NO.:20000 SERIES-
XX MARK:NO MOUNT
NO MARK:REC/PB MODE
IC4501
LCD DRIVER
IC4502
EVR
IC4603
BUFFER
IC4602
TIMING GENERATOR
IC4601
DC/AC CONVERTER
CN4602 15P
LCD902
COLOR LCD UNIT
CN4501 20P
TO CF-58 BOARD (THROUGH THE FP-47 FLEXIBLE)
(SEE PAGE 4-77)
T4801
INVERTER TRANSFORMER
LN4801
BACK LIGHT
•SIGNAL PATH
VIDEO SIGNAL
CHROMA
Y
Y/CHROMA
REC
PB
Note:
The components indentified by mark ⚠ or dotted line with mark ⚠ are critical for safety.
Replace only with part number specified.
COLOR EVF MODEL:CCD-TR950E

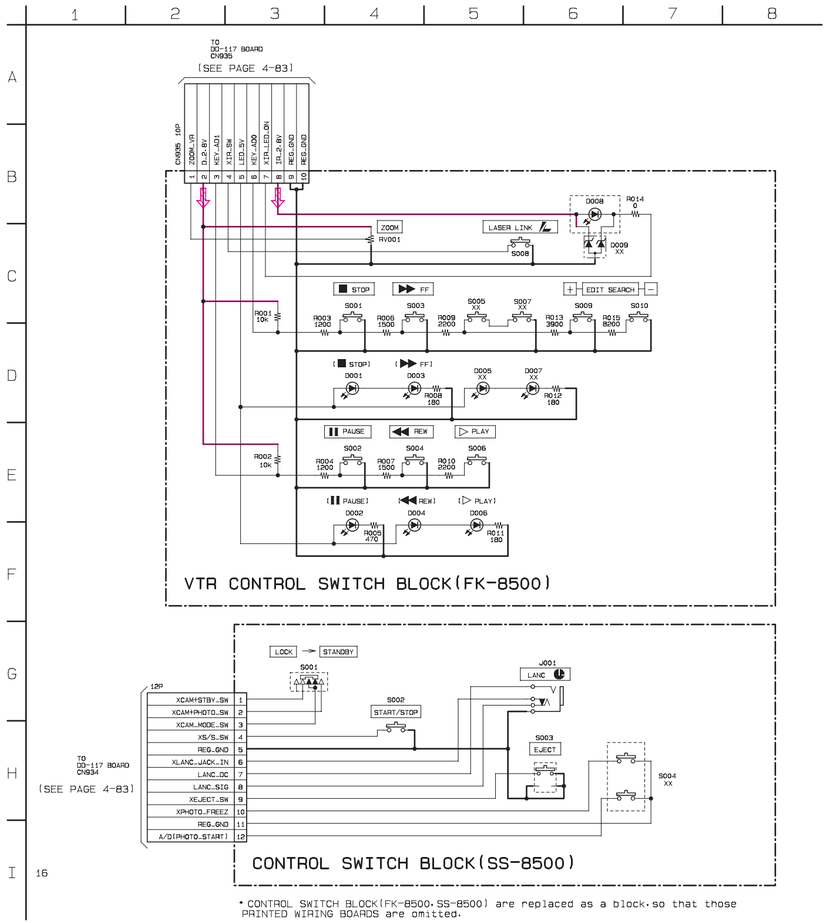
TO DD-117 BOARD CN935
(SEE PAGE 4-83)
CN935 10P
ZOOM_VR
3.3_5V
XSTART
XEJECT
LED_5V
KEY_ADD
XTR_LED_ON
TR_3.6V
REG_GND
REG_GND
ZOOM
RV001
LASER LINK
S008
D008
D009
R014
STOP
FF
EDIT SEARCH
S001
S003
S005
S007
S009
S010
R001 10k
R003 1200
R006 1500
R009 2000
R013 3900
R015 8200
D001
D003
D005
D007
R008 180
R012 180
PAUSE
REW
PLAY
S002
S004
S006
R002 10k
R004 1200
R007 1500
R010 2000
D002
D004
D006
R005 470
R011 180
VTR CONTROL SWITCH BLOCK(FK-8500)
LOCK
STANDBY
S001
J001
LANC
S002
START/STOP
S003
EJECT
S004
XX
12P
XCAM+STBY_SW 1
XCAM+PHOTO_SW 2
XCAM_MODE_SW 3
XS/S_SW 4
REG_GND 5
XLANC_JACK_IN 6
LANC_DC 7
LANC_SIG 8
XEJECT_SW 9
XPHOTO_FREEZ 10
REG_GND 11
A/DIPHOTO_START 12
TO DD-117 BOARD CN934
(SEE PAGE 4-83)
CONTROL SWITCH BLOCK(SS-8500)
* CONTROL SWITCH BLOCK(FK-8500,SS-8500) are replaced as a block,so that those PRINTED WIRING BOARDS are omitted.

VF-129 (B/W EVF) PRINTED WIRING BOARD

— Ref. No. VF-129 Board; 3,000 Series —

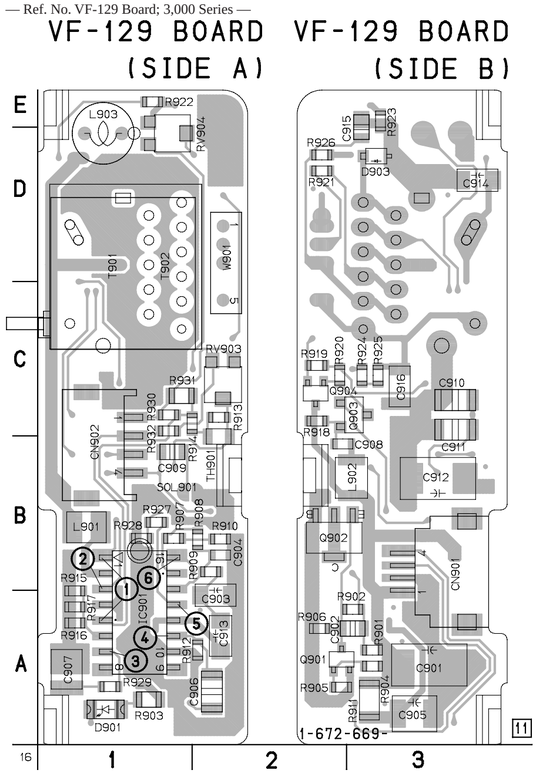

VF-129 BOARD

C901	A-3	R905	A-2
C902	A-3	R906	A-2
C903	A-2	R907	B-1
C904	B-2	R908	B-2
C905	A-3	R909	B-2
C906	A-2	R910	B-2
C907	A-1	R911	A-3
C908	C-2	R912	A-2
C909	B-1	R913	C-2
C910	C-3	R914	C-2
C911	C-3	R915	B-1
C912	B-3	R916	A-1
C913	A-2	R917	A-1
C914	D-3	R918	C-2
C915	E-3	R919	C-2
C916	C-3	R920	C-2
		R921	D-2
CN901	B-3	R922	E-1
CN902	B-1	R923	E-3
		R924	C-3
D901	A-1	R925	C-3
D903	D-3	R926	D-2
		R927	B-1
IC901	A-1	R928	B-1
		R929	A-1
L901	B-1	R930	C-1
L902	B-3	R931	C-1
L903	D-1	R932	C-1
Q901	A-2	RV903	C-2
Q902	B-2	RV904	D-1
Q903	C-3		
Q904	C-2	T901	D-1
		T902	D-1
R901	A-3		
R902	A-3	TH901	B-2
R903	A-1		
R904	A-3	W901	D-2

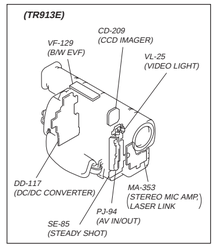

For printed wiring boards

• Chip parts

Transistor

There are few cases that the part printed on this diagram isn't mounted in this model.

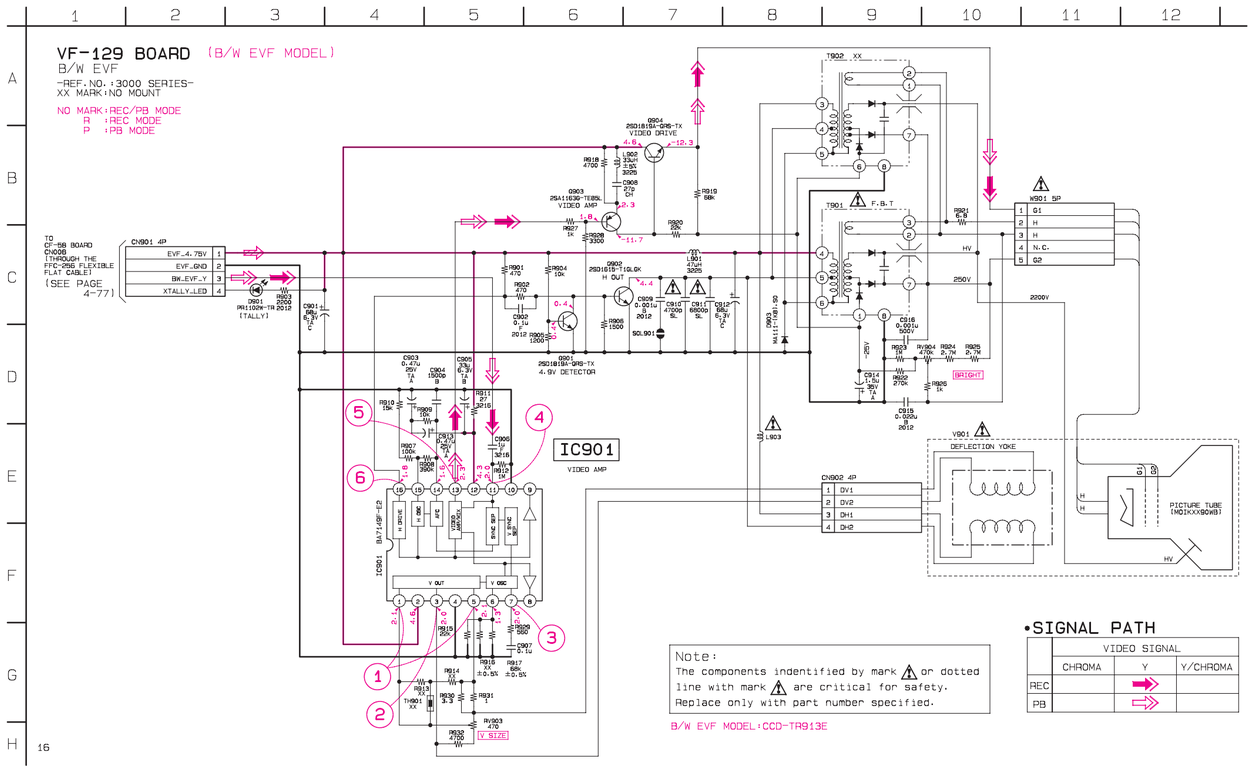

•SIGNAL PATH

	VIDEO SIGNAL		
	CHROMA	Y	Y/CHROMA
REC		➡	
PB		⇨	

VF-129 BOARD

CAMERA REC/PB

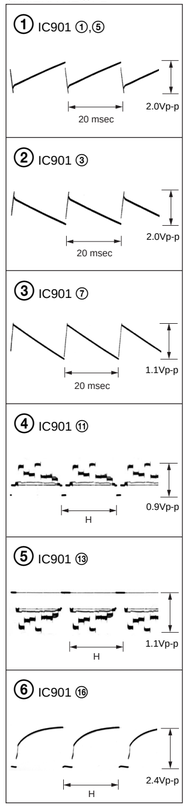

CF-58 (USER CONTROL) PRINTED WIRING BOARD
— Ref. No. CF-58 Board; 2,000 Series —

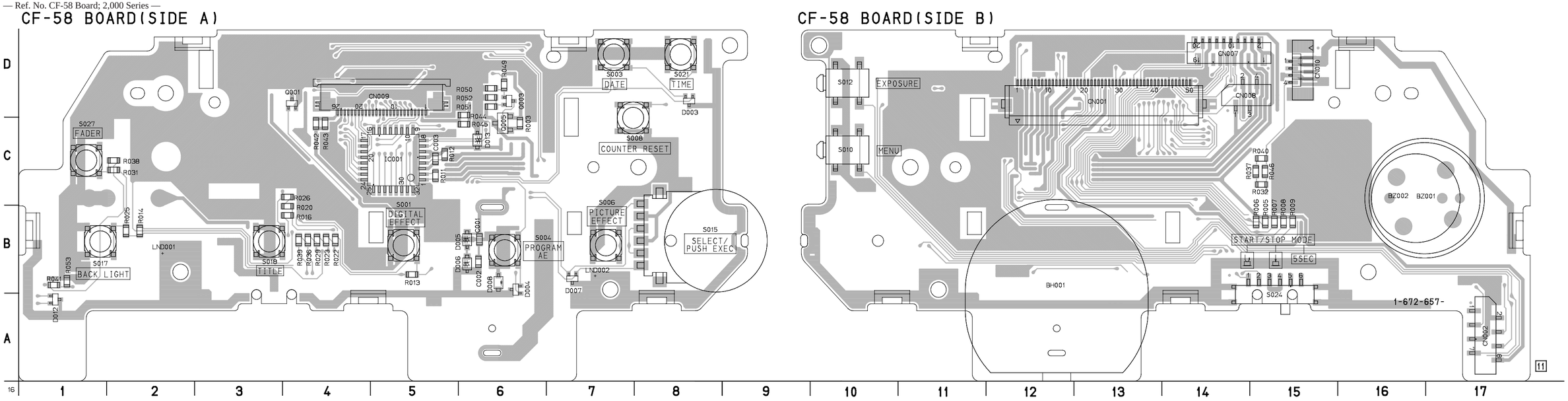

For printed wiring boards
• Chip parts

Transistor Diode

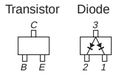

There are few cases that the part printed on this diagram isn't mounted in this model.

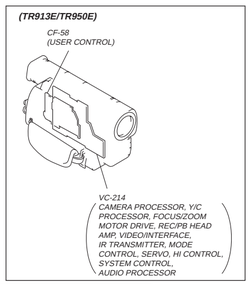
(TR913E/TR950E)
CF-58
(USER CONTROL)
VC-214
CAMERA PROCESSOR, Y/C PROCESSOR, FOCUS/ZOOM MOTOR DRIVE, REC/PB HEAD AMP, VIDEO/INTERFACE, IR TRANSMITTER, MODE CONTROL, SERVO, HI CONTROL, SYSTEM CONTROL, AUDIO PROCESSOR

CF-58 BOARD

BH001	B-12	R003	C-6	R049	D-6		
		R005	B-15	R050	D-6		
BZ001	C-16	R006	B-15	R051	D-6		
BZ002	C-16	R007	B-15	R052	D-6		
		R008	D-15	R053	B-1		
C001	B-6	R009	D-15				
C002	B-6	R011	C-5	S001	B-5		
C003	C-5	R012	C-5	S003	D-7		
		R013	B-5	S004	B-6		
CN001	D-13	R014	B-2	S006	B-7		
CN002	A-17	R018	B-4	S008	C-7		
CN003	D-5	R020	C-4	S010	C-10		
CN007	D14	R022	B-4	S012	D-10		
CN008	D-14	R023	B-4	S015	B-8		
CN010	D-15	R025	B-2	S017	B-1		
		R028	C-4	S018	B-3		
D003	D-8	R029	B-4	S021	D-8		
D004	B-6	R031	C-2	S024	A-15		
D005	B-6	R032	C-15	S027	C-1		
D006	B-6	R036	B-4				
D007	B-7	R037	C-15				
D008	B-6	R038	C-2				
D012	A-1	R039	B-4				
D013	C-6	R040	C-15				
		R041	B-1				
IC001	C-5	R042	C-4				
		R043	C-4				
Q001	D-3	R044	D-6				
Q003	D-6	R045	C-6				
Q005	C-6	R046	C-15				

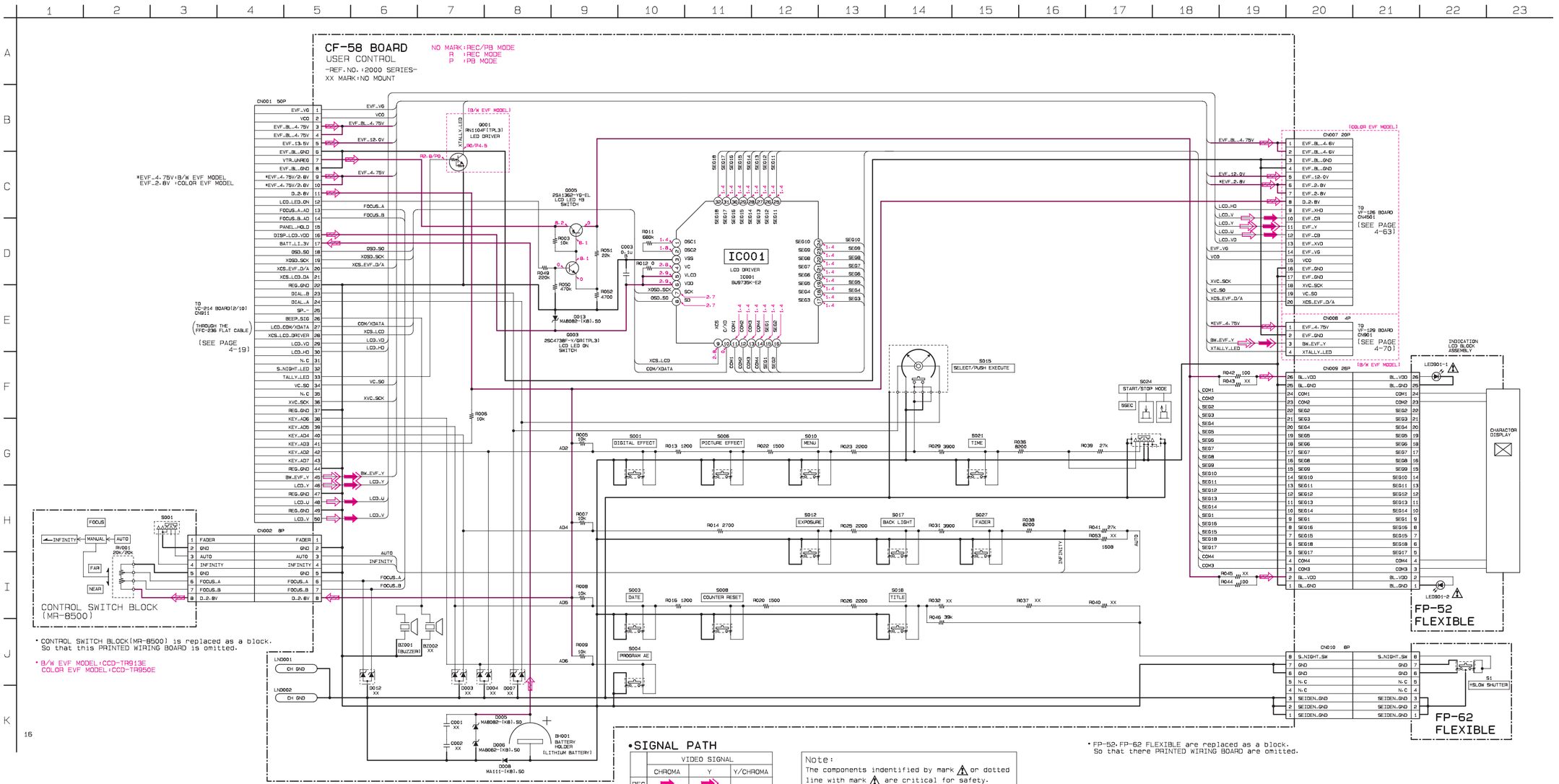
CF-58 BOARD
USER CONTROL
-REF.NO.:2000 SERIES-
XX MARK:NO MOUNT
NO MARK:REC/PB MODE
R :REC MODE
P :PB MODE
IC001
LCD DRIVER
IC001
BU9735K-E2
CONTROL SWITCH BLOCK
(MR-8500)
FP-52
FLEXIBLE
FP-62
FLEXIBLE
CHARACTOR DISPLAY
INDICATION LCD BLOCK ASSEMBLY
SELECT/PUSH EXECUTE
START/STOP MODE
DIGITAL EFFECT
PICTURE EFFECT
MENU
TIME
EXPOSURE
BACK LIGHT
FADER
DATE
COUNTER RESET
TITLE
PROGRAM AE
HSLOW SHUTTER
BATTERY HOLDER (LITHIUM BATTERY)
*EVF_4.75V:B/W EVF MODEL
EVF_2.8V :COLOR EVF MODEL
TO VC-214 BOARD(2/10) CN911
THROUGH THE FFC-236 FLAT CABLE
(SEE PAGE 4-19)
TO VF-126 BOARD CN4501
(SEE PAGE 4-63)
TO VF-129 BOARD CN901
(SEE PAGE 4-70)
(B/W EVF MODEL)
(COLOR EVF MODEL)
• CONTROL SWITCH BLOCK(MR-8500) is replaced as a block.
So that this PRINTED WIRING BOARD is omitted.
• B/W EVF MODEL:CCD-TR913E
COLOR EVF MODEL:CCD-TR950E
• FP-52,FP-62 FLEXIBLE are replaced as a block.
So that there PRINTED WIRING BOARD are omitted.
•SIGNAL PATH
VIDEO SIGNAL
CHROMA
Y
Y/CHROMA
REC
PB
Note:
The components indentified by mark ⚠ or dotted line with mark ⚠ are critical for safety.
Replace only with part number specified.

For printed wiring boards

- This board is four-layer print board. However, the patterns of layers two and three have not been included in the diagram.
- Chip parts

Transistor

There are few cases that the part printed on this diagram isn't mounted in this model.

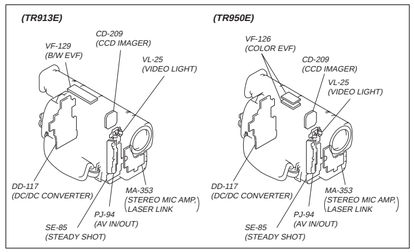

DD-117 BOARD

C801	E-8	D806	B-7	Q828	B-1	R852	D-6
C802	E-8	D809	B-2	Q829	A-1	R853	D-6
C803	D-7	D810	B-7	Q830	B-2	R854	D-6
C804	E-7	D812	B-7	Q831	A-2	R859	E-7
C805	D-7	D813	C-8	Q832	B-1	R864	E-7
C806	E-7	D814	F-9	Q833	A-7	R865	B-7
C807	D-7	D815	F-8	Q834	B-1	R866	B-7
C808	D-8	D816	E-8	Q835	A-3	R867	E-7
C809	D-7	D817	C-8	Q836	A-4	R868	A-6
C810	D-8	D818	D-6	Q837	A-2	R870	A-3
C811	D-7	D819	E-7	Q838	A-3	R871	A-3
C812	D-8	D820	B-2	Q839	A-4	R872	B-2
C813	D-7	D821	B-2	Q840	A-3	R873	A-1
C814	E-3	D822	F-8	Q841	A-2	R874	B-1
C815	C-8	D932	G-7	Q842	A-2	R875	A-6
C816	E-4	D933	F-8	Q843	A-2	R876	B-1
C817	E-4	D934	G-7	Q844	A-4	R877	A-3
C818	F-8	D935	F-8	Q845	A-3	R878	A-7
C819	C-7	D936	G-7	Q846	A-2	R879	B-1
C820	C-7	D938	E-4	Q847	A-2	R880	B-1
C821	C-7			Q848	A-3	R881	B-1
C822	E-4	FB931	D-4	Q849	A-3	R882	B-1
C823	C-8	FB932	E-4	Q850	A-3	R883	B-3
C824	C-7	FB933	D-4	Q851	E-8	R884	B-4
C825	B-7			Q852	B-6	R885	A-2
C826	D-4	IC801	D-7	Q853	B-7	R887	B-3
C827	E-7	IC802	E-7	Q854	B-7	R888	B-3
C828	E-6			Q855	B-7	R889	A-2
C829	E-6	L801	D-2	Q856	A-1	R890	A-2
C830	D-7	L802	D-3	Q932	G-8	R891	A-3
C831	E-7	L803	D-3	Q933	G-8	R892	A-3
C832	B-7	L804	E-4	Q934	G-8	R893	A-3
C833	B-7	L805	B-3			R894	A-2
C834	C-8	L806	C-3	R801	E-7	R895	A-1
C836	B-7	L807	C-2	R802	D-8	R896	A-4
C837	C-7	L808	B-3	R803	D-8	R897	A-4
C838	C-7	L809	C-3	R804	D-8	R898	A-2
C840	D-3	L810	B-8	R805	D-7	R899	A-2
C841	B-8	L811	B-8	R806	E-7	R900	A-2
C842	A-1	L812	B-8	R807	D-7	R901	A-1
C843	B-8	L813	B-8	R808	D-8	R902	A-1
C844	A-8	L814	A-7	R809	D-8	R903	A-3
C846	B-8	L815	A-7	R810	D-7	R904	A-3
C847	B-2	L816	B-8	R811	D-7	R905	A-3
C848	B-3	L817	A-8	R812	D-7	R906	A-3
C849	A-7	L818	A-7	R813	F-8	R907	A-3
C850	A-8	L819	A-8	R814	D-8	R908	B-7
C851	B-8	L820	D-3	R815	D-8	R910	B-7
C852	B-3	L821	A-1	R816	D-8	R911	B-7
C853	B-3	L822	A-6	R817	D-8	R912	B-7
C854	B-8			R818	D-7	R913	F-8
C855	A-7	LF801	D-2	R819	D-7	R914	D-7
C856	E-7			R820	D-8	R915	E-6
C857	A-7	PS801	F-8	R821	D-7	R916	A-2
C860	A-1	PS802	F-7	R822	E-8	R917	A-3
C861	A-2	PS803	F-7	R824	D-7	R918	A-6
C862	A-6	PS804	F-7	R825	D-8	R919	A-2
C863	B-1	PS805	F-7	R826	D-8	R920	A-2
C864	B-2	PS806	F-7	R827	E-8	R921	D-3
C865	A-1	PS807	F-8	R828	E-8	R922	D-2
C866	A-1			R829	D-7	R923	D-3
C867	A-2	Q801	F-8	R830	D-7	R924	B-1
C868	A-1	Q803	E-8	R831	F-8	R925	A-4
C869	A-1	Q804	F-8	R832	D-8	R926	C-9
C870	E-7	Q805	F-8	R833	D-7	R932	G-8
C871	B-6	Q806	C-6	R834	D-7	R933	F-2
C872	F-8	Q807	C-8	R835	D-8	R934	F-2
C873	A-6	Q808	C-8	R836	D-8	R935	F-2
C874	A-3	Q809	B-7	R837	D-7	R936	F-2
C875	A-7	Q810	C-7	R838	D-8	R937	F-2
C876	D-2	Q812	C-8	R839	C-7	R938	F-2
C877	D-2	Q813	C-7	R840	C-8	R939	F-2
C878	B-7	Q814	C-7	R841	C-8	R940	G-8
		Q815	C-7	R842	E-6	R941	G-8
CN801	C-1	Q817	C-7	R843	C-7	R942	E-4
CN931	C-9	Q819	D-4	R844	D-2	R943	G-7
CN933	A-9	Q820	E-7	R845	D-6	R944	B-1
CN934	D-4	Q823	B-7	R846	D-2	R945	B-1
CN935	G-3	Q824	E-7	R847	E-7		
CN936	F-1	Q826	A-3	R849	E-6	T801	B-2
		Q827	A-7	R850	E-6		

DD-117 (DC/DC CONVERTER) PRINTED WIRING BOARD

— Ref. No. DD-117 Board; 2,000 Series —

DD-117 BOARD(SIDE A)

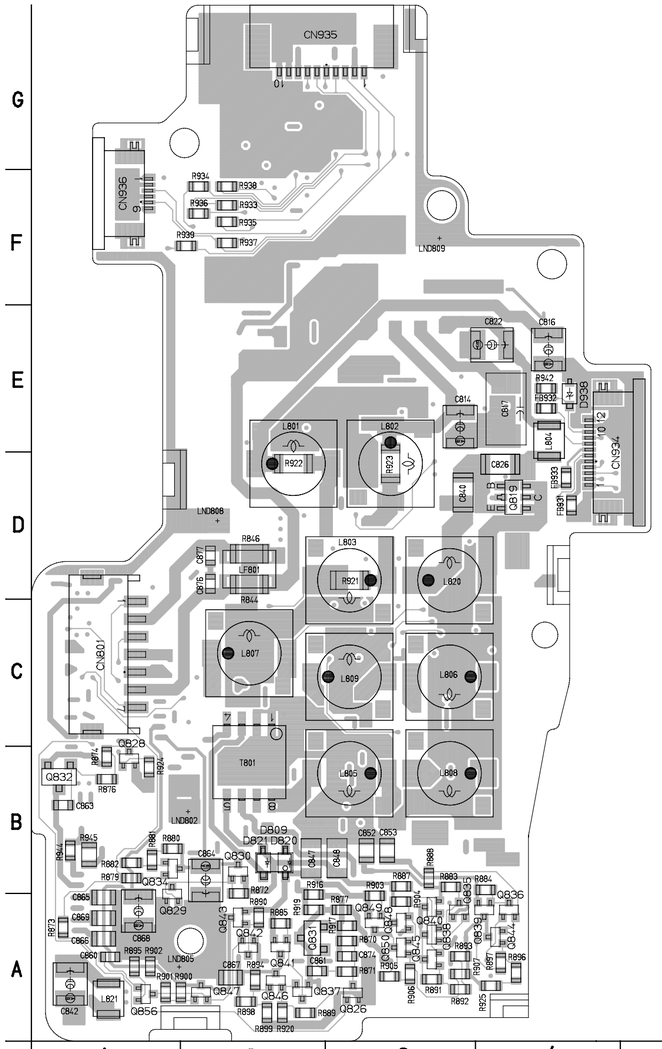

DD-117 BOARD(SIDE B)

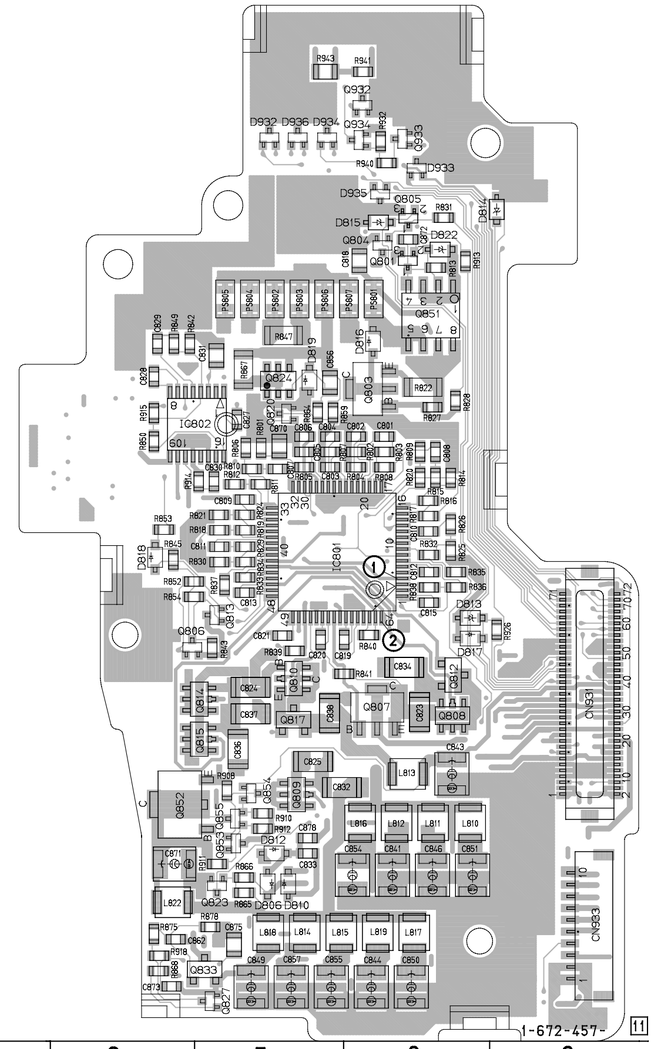

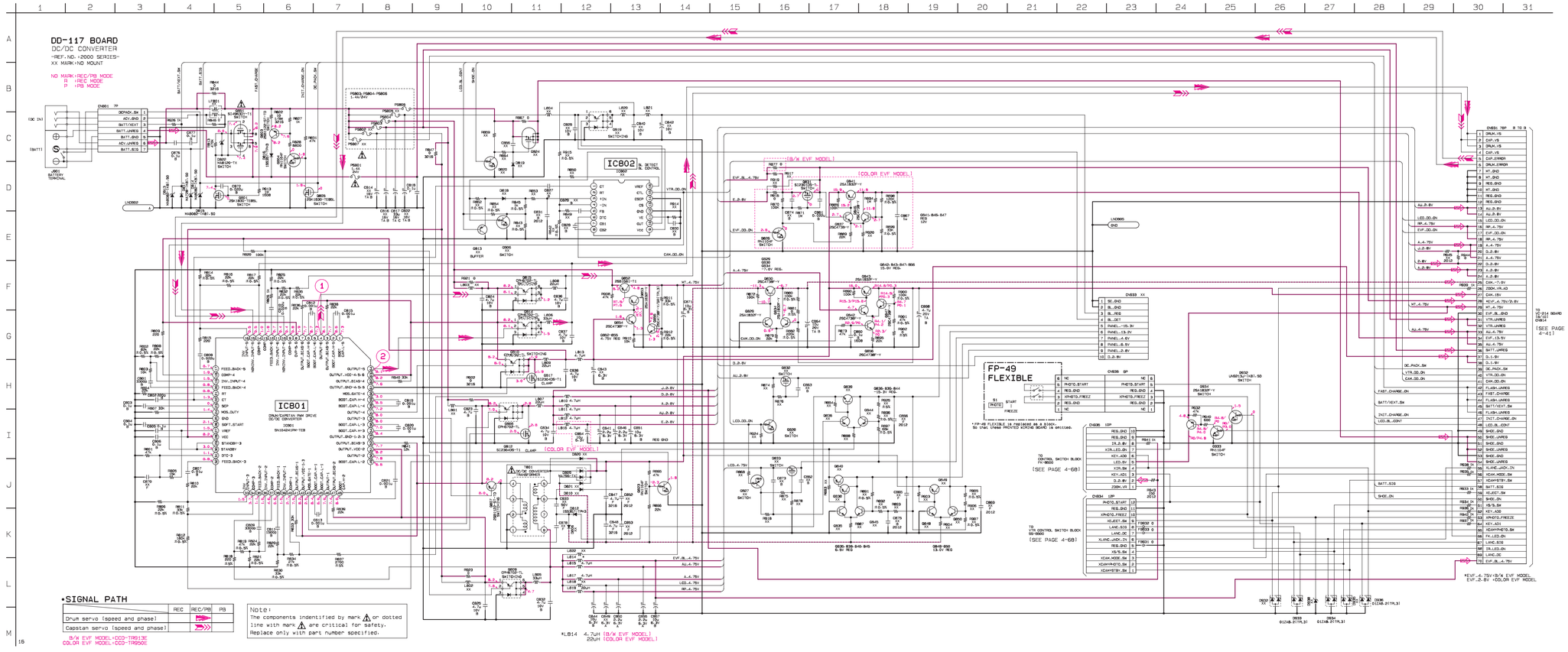

DD-117 BOARD
CAMERA REC/PB

① IC801 ④

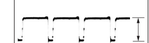

② IC801 ⑭

SECTION 5
ADJUSTMENTS

5-1. CAMERA SECTION ADJUSTMENT

1-1. PREPARATIONS BEFORE ADJUSTMENT (CAMERA SECTION)

1-1-1. List of Service Tools

• Oscilloscope • Color monitor • Vectorscope
• Regulated power supply • Digital voltmeter

Ref. No.	Name	Parts Code	Usage
J-1	Filter for color temperature correction (C14)	J-6080-058-A	Auto white balance adjustment/check White balance adjustment/check
J-2	ND filter 1.0	J-6080-808-A	White balance check
	ND filter 0.3	J-6080-818-A	White balance check
J-3	Pattern box PTB-450	J-6082-200-A	
J-4	Color chart for pattern box	J-6020-250-A	
J-5	Adjustment remote commander (RM-95 upgraded). (Note 2)	J-6082-053-B	
J-6	Siemens star chart	J-6080-875-A	For checking the flange back
J-7	Clear chart for pattern box	J-6080-621-A	
J-8	CPC-7 jig	J-6082-382-A	For adjusting the video section For adjusting the color viewfinder section
J-9	Power cord (Note 2)	J-6082-223-A	For connecting the battery terminal and DC power supply
J-10	AFM DEV jig	J-6082-312-A	For adjusting the deviation
J-11	Extension cable (16P, 0.5mm)	J-6082-357-A	For extension between the CD-209 board (CN1401) and the VC-214 board (CN501)
J-12	Extension cable (70P, 0.5mm)	J-6082-439-A	For extension between the DD-117 board (CN931) and the VC-214 board (CN914)
J-13	IR receiver jig	J-6082-383-A	For adjusting the IR transmitter

Note 1: If the micro processor IC in the adjustment remote commander is not the new micro processor (UPD7503G-C56-12), the pages cannot be switched. In this case, replace with the new micro processor (8-759-148-35).

Note 2: Connect the adjustment remote commander to the LANC jack, and set to HOLD switch to the “ADJ” side.

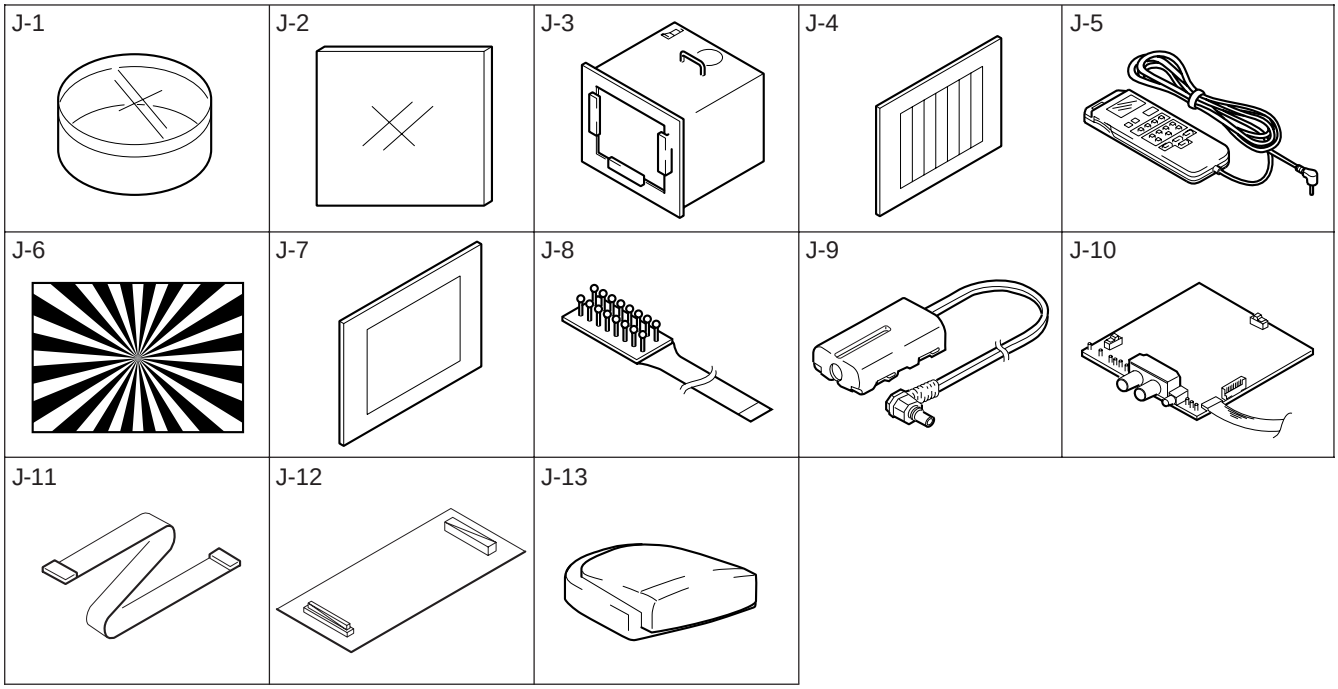

Fig. 5-1-1.

1-1-2. Adjusting items when replacing main parts

When replacing main parts, adjust the items indicated by ● in the following table.

Note 1 : Color EVF model (CCD-TR950E) only

Note 2 : B/W EVF model (CCD-TR913E) only

Adjustment Section	Adjustment	Replaced parts																						
		Lens device	CD-209 board IC1401 (CCD imager)	SE-85 board SE451 (Pitch sensor)	SE-85 board SE452 (Yaw sensor)	VC-214 board IC202 (Y, C process)	VC-214 board IC151 (Y, C IN/OUT)	VC-214 board IC001 (REC/PB AMP)	VC-214 board IC751 (IR transmitter)	VC-214 board IC301 (AFM process)	VC-214 board IC501 (Timing generator)	VC-214 board IC502 (S/H, AGC)	VC-214 board IC401 (EEPROM)	Mechanism deck M901 (Drum assembly)	Mechanism deck M902 (Capstan motor)	VF-126 board IC4501 (LCD driver)(Note 1)	VF-126 board IC4602 (Timing generator) (Note 1)	VF-126 board IC4601 (Backlight driver) (Note 1)	VF-126 board ND4801 (Fluorescent tube) (Note 1)	Color EVF block LCD901 (LCD panel) (Note 1)	VF-129 board IC901 (CRT driver)(Note 2)	VF-129 board T901 (FBT)(Note 2)	B/W EVF block V901 (Picture tube)(Note 2)
Camera	Initialization of D, E, F page data												●											
	HALL adj.	●											●											
	Flange back adj.	●	●										●											
	AGC gain calibration adj.		●									●	●											
	Color reproduction adj.		●									●	●											
	IRIS IN/OUT adj.	●	●									●	●											
	MAX GAIN adj.		●									●	●											
	Auto white balance standard data input		●									●	●											
	Auto white balance adj.		●									●	●											
	Angular velocity sensor sensitivity preset and steady shot check			●	●								●											
Color EVF (Note 1)	Color EVF initial data input												●											
	VCO adj.												●				●							
	Bright adj.												●			●								
	Contrast adj.												●			●								
	Backlight consumption current adj.												●					●	●					
	White balance adj.												●			●			●	●				
B/W EVF (Note 2)	Centering adj.																				●	●	●	
	Focus adj.																				●	●	●	
	Aberration adj.																				●	●	●	
	Horizontal amplitude adj.																				●	●	●	
	Vertical amplitude adj.																				●	●	●	
	Brightness adj.																				●	●	●	
System Control	Battery end adj.												●											
Servo	CAP FG offset adj.												●		●									
	Switching position adj.												●	●										
Video	28MHz origin oscillation adj.										●		●											
	AFC f_0 adj.					●							●											
	Filter f_0 adj.						●						●											
	Y OUT level adj.					●	●						●											
	C OUT level adj.					●	●						●											
	RP filter f_0 adj.							●					●											
	REC Y current adj.					●		●					●											
	REC L level adj.					●		●					●											
	REC C current adj.					●		●					●											
IR	IR video carrier frequency adj.						●		●				●											
	IR video deviation adj.						●		●				●											
	IR audio deviation adj.								●				●											
Audio	1.5MHz deviation adj.									●			●											
	1.7MHz deviation adj.									●			●											
	BPF f_0 adj.									●			●											
Mechanism	Tape path adj.													●	●									

Table. 5-1-1.

1-1-3. Preparations

Note 1: For details of how remove the cabinet and boards, refer to "2. DISASSEMBLY".

Note 2: When performing only the adjustments, the lens block and boards need not be disassembled.

1) Connect the equipment for adjustments according to Fig. 5-1-3.
2) By setting the "Forced Camera Power ON mode", the camera power can be turned ON even if the front panel block (MA-353 board, power switch, microphone unit) has been removed. When removing the front panel block disconnect the following connector.
   1. VC-214 board CN903 (20P 0.5mm)

Note 3: As removing the cabinet (R) (removing the VC-214 board CN911) means removing the lithium 3V power supply (CF-58 board BH001), data such as date, time, user-set menus will be lost. After completing adjustments, reset these data. If the cabinet (R) has been removed, the self-diagnosis data, data on history of use (total drum rotation time, etc.) will be lost. Before removing, note down the self-diagnosis data and data on history use (data of page: 2, address: A2 to AA). (Refer to "SELF-DIAGNOSIS FUNCTION" for the self-diagnosis data, and to "5-4. Service Mode" for the data on the history use.)

Note 4: Setting the "Forced Camera Power ON" Mode
1) Select page: 0, address: 01, and set data: 01.
2) Select page: D, address: 10, set data: 01, and press the PAUSE button of the adjustment remote commander.
The above procedure will enable the camera power to be turned on with the front panel block removed. After completing adjustments, be sure to exit the "Forced Camera Power ON Mode".

Note 5: Exiting the "Forced Camera Power ON" Mode
1) Select page: 0, address: 01, and set data: 01.
2) Select page: D, address: 10, set data: 00, and press the PAUSE button of the adjustment remote commander.
3) Select page: 0, address: 01, and set data: 00.

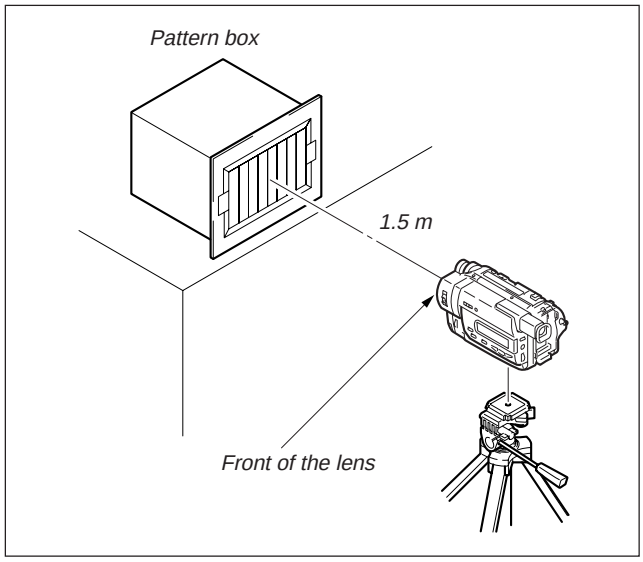

Fig. 5-1-2.

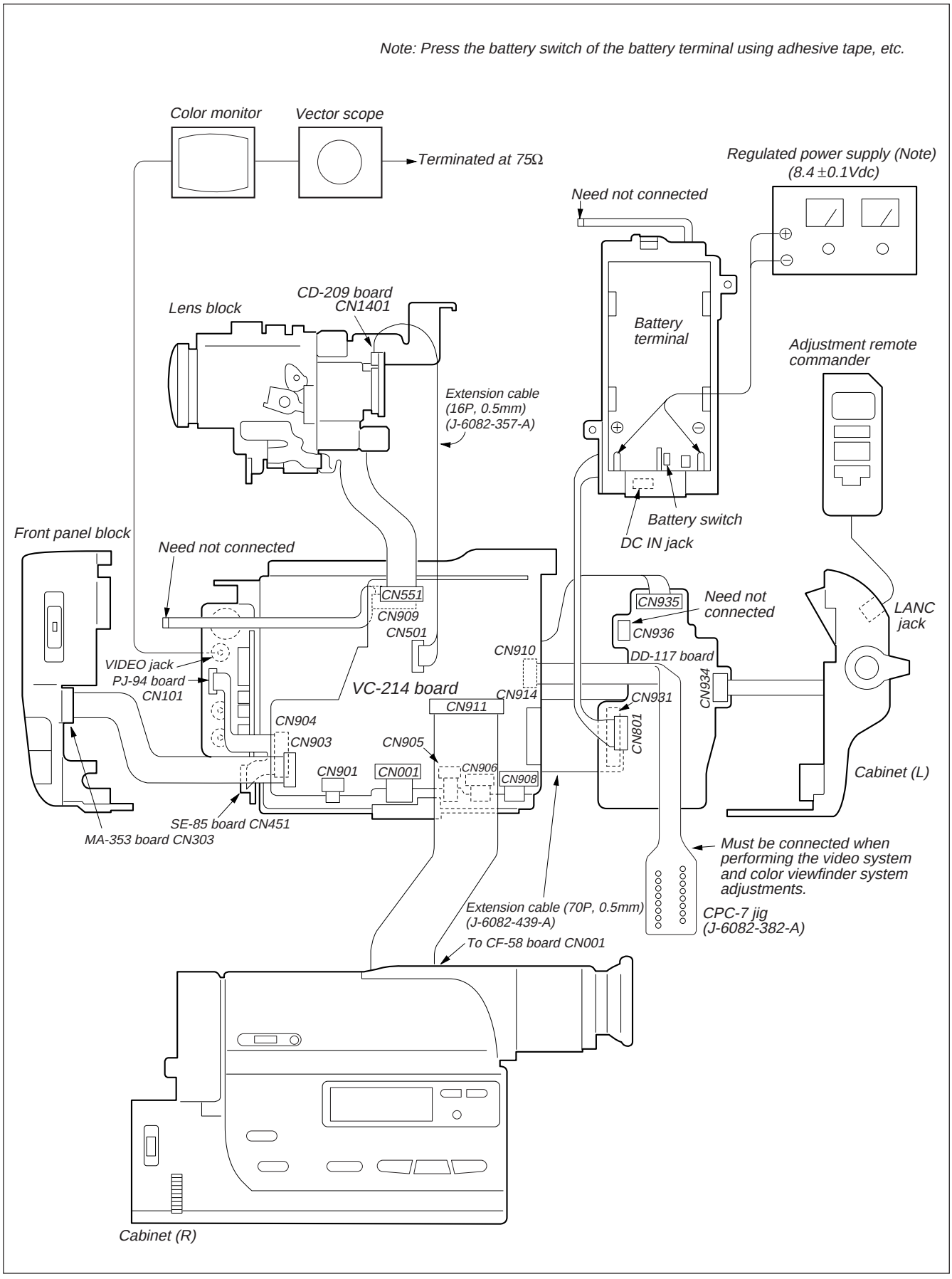
Note: Press the battery switch of the battery terminal using adhesive tape, etc.
Color monitor
Vector scope
Terminated at 75Ω
Regulated power supply (Note)
(8.4 ±0.1Vdc)
Need not connected
Lens block
CD-209 board
CN1401
Battery terminal
Adjustment remote commander
Extension cable
(16P, 0.5mm)
(J-6082-357-A)
Front panel block
Need not connected
Battery switch
DC IN jack
CN551
CN909
CN501
CN935
Need not connected
CN936
LANC jack
CN910
DD-117 board
VIDEO jack
PJ-94 board
CN101
VC-214 board
CN914
CN931
CN934
CN911
CN904
CN903
CN905
CN801
CN901
CN001
CN906
CN908
Cabinet (L)
SE-85 board CN451
MA-353 board CN303
Must be connected when performing the video system and color viewfinder system adjustments.
Extension cable (70P, 0.5mm)
(J-6082-439-A)
CPC-7 jig
(J-6082-382-A)
To CF-58 board CN001
Cabinet (R)

Fig. 5-1-3.

1-1-4. Precaution

1. Setting the Switch

Unless otherwise specified, set the switches as follows and perform adjustments without loading cassette.

1. POWER switch (MA-353 board) ..... CAMERA
2. NIGHT SHOT switch (Lens block) ..... OFF
3. VIDEO LIGHT switch (MA-353 board) ..... OFF
4. DEMO MODE (Menu display) ..... OFF
5. DIGITAL ZOOM (Menu display) ..... OFF
6. STEADY SHOT (Menu display) ..... OFF
7. FOCUS switch (MR-8500 block) ..... MANUAL
8. PROGRAM AE (CF-58 board) ..... Auto
9. BACK LIGHT (CF-58 board) ..... OFF
10. PICTURE EFFECT (CF-58 board) ..... OFF
11. DIGITAL EFFECT (CF-58 board) ..... OFF
12. 16 : 9 WIDE (MENU display) ..... OFF

2. Order of Adjustments

Basically carry out adjustments in the order given.

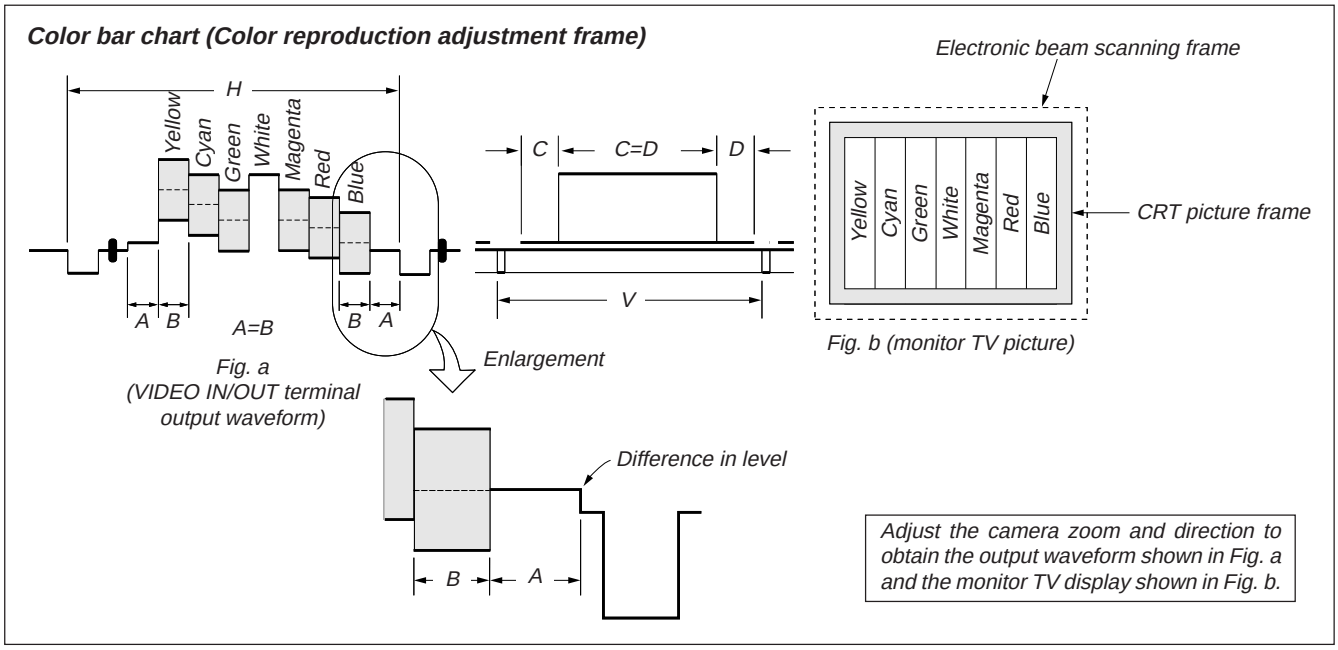

Fig. 5-1-4.

3. Subjects

1) Color bar chart (Color reproduction adjustment frame)
   When performing adjustments using the color bar chart, adjust the picture frame as shown in Fig. 5-1-4. (Color reproduction adjustment frame)
2) Clear chart (Color reproduction adjustment frame)
   Remove the color bar chart from the pattern box and insert a clear chart in its place. (Do not perform zoom operations during this time.)
3) Flange back adjustment chart
   Make the chart shown in Fig. 5-1-5. using A0 size (1189mm × 841mm) black and white vellum paper.

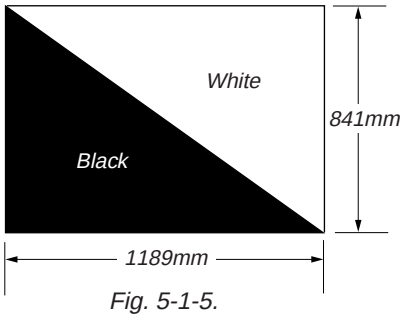

Fig. 5-1-5.

Note: Use matte vellum paper bigger than A0, and make sure the edges of the black and white paper joined together are not rough.

1-2. INITIALIZATION OF D, E, F PAGE DATA

1. Initializing the D,E,F Page Data

Note: If the D,E,F page data has been initialized, "Modification of D, E, F Page Data" and all adjustments need to be performed again.

Adjusting Page	D
Adjusting Address	00 to 6F
Adjusting Page	F
Adjusting Address	00 to FF
Adjusting Page	E
Adjusting Address	00 to FF

Initializing Method:

1) Select page: 0, address: 01, and set data: 01.
2) Select page: 6, address: 00, and set data: 51.
3) Select page: 6, address: 01, set data: 51, and press the PAUSE button of the adjustment remote commander.
4) Select page: 6, address: 02, and check that the data is 01.
5) Select page: 2, address: 00, and set data: 29.
6) Select page: 2, address: 01, set data: 29, and press the PAUSE button of the adjustment remote commander.
7) Perform "Modification of D,E,F Page Data".

2. Modification of D, E, F Page Data

If the D, E, F page data has been initialized, change the data of the "Fixed data-2" address shown in the following tables by manual input.

Modifying Method:

1) Before changing the data, select page: 0, address: 01, and set data: 01.
2) New data for changing are not shown in the tables because they are different in destination. When changing the data, copy the data built in the same model.
   Note: If copy the data built in the different model, the camcorder may not operate.
3) When changing the data, press the PAUSE button of the adjustment remote commander each time when setting new data to write the data in the non-volatile memory.
4) Check that the data of adjustment addresses is the initial value. If not, change the data to the initial value.
5) After completing "Modification of D, E, F Page Data", select page: 0, address: 01, and set data: 00. Also perform all adjustments.

3. D Page Table

Note : Fixed data-1 : Initialized data. (Refer to "1. Initializing the D,E,F Page Data".)
Fixed data-2 : Modified data. (Refer to "2. Modification of D, E, F Page Data".)

Address	Initial value	Remark
00 to 0F		
10	00	Test mode
11		Fixed data-1
12		(Initialized data)
13		
14		
15		
16		
17		
18		
19		
1A		Fixed data-2
1B		(Modified data, copy the data built in the same model.)
1C		Fixed data-1
1D		(Initialized data)
1E		Fixed data-2
1F		Fixed data-1
20		Fixed data-2
21		Fixed data-1
22		(Initialized data)
23		
24		
25		
26		
27		
28		Fixed data-2
29		(Modified data, copy the data built in the same model.)
2A		
2B		
2C		Fixed data-1
2D		
2E		Fixed data-2
2F		(Modified data, copy the data built in the same model.)
30	88	Battery end adj.
31	8D	
32	A8	
33	BD	
34	C8	
35		Fixed data-1
36		Fixed data-2
37		(Modified data, copy the data built in the same model.)
38		
39		
3A		
3B		
3C		
3D		
3E		
3F		Fixed data-1

Address	Initial value	Remark
40		Fixed data-2
41		
42		Fixed data-1
43		Fixed data-2
44		Fixed data-1
45		(Initialized data)
46		
47		
48		
49		Fixed data-2
4A		
4B		
4C		Fixed data-1
4D		Fixed data-2
4E		Fixed data-1
4F		(Initialized data)
50		
51		
52		
53		
54		
55		
56		
57		
58		
59		
5A		
5B		
5C		
5D		
5E		
5F		
60		
61		
62		
63		
64		
65		
66		
67		
68		
69		
6A		
6B		
6C		
6D		
6E		
6F		

Table. 5-1-2.

4. F Page table

Note : Fixed data-1 : Initialized data. (Refer to "1. Initializing the D,E,F Page Data".)
Fixed data-2 : Modified data. (Refer to "2. Modification of D, E, F Page Data".)

Address	Initial value	Remark
00 to 0F		
10	00	Emergency memory address
11	00	
12	00	
13	00	
14	00	
15	00	
16	00	
17	00	
18	00	
19	00	
1A	00	
1B	00	
1C		Fixed data-1
1D		Fixed data-2
1E		Fixed data-1
1F		(Initialized data)
20		
21		
22		
23		
24		
25		
26		
27		
28		
29		
2A		
2B		
2C		
2D		Fixed data-2
2E	47	AGC gain calibration adj.
2F	80	
30	A0	
31	80	
32	2B	AWB standard data input
33	80	
34	65	
35	80	
36		Fixed data-1
37		(Initialized data)
38	1C	Flange back adj.
39	03	
3A	25	
3B	24	
3C	11	
3D	05	
3E	0A	Switching position adj.
3F	00	
40	8C	28MHz origin osc. adj.
41		Fixed data-1
42		(Initialized data)

Address	Initial value	Remark
43		Fixed data-1
44		(Initialized data)
45		
46		
47	84	HALL adj.
48	68	
49	08	Max gain adj.
4A		Fixed data-1
4B		(Initialized data)
4C		
4D		
4E	33	Color reproduction adj.
4F		Fixed data-1
50	34	Color reproduction adj.
51		Fixed data-1
52		(Initialized data)
53		
54	8D	Auto white balance adj.
55	87	
56	41	IRIS IN/OUT adj.
57	49	
58		Fixed data-1
59		(Initialized data)
5A	2A	Flange back adj.
5B	00	
5C	19	
5D	00	
5E	37	
5F	76	Angular velocity sensor sensitivity
60	63	preset and steady shot check.
61	83	CAP FG offset adj.
62	7A	1.5MHz deviation adj.
63	8D	1.7MHz deviation adj.
64	7A	BPF f_0 adj.
65		Fixed data-1
66	41	IR video deviation adj.
67	33	IR audio deviation adj.
68	C7	IR video carrier freq. adj.
69	6B	Y OUT level adj.
6A	40	AFC f_0 adj.
6B	9A	C OUT level adj.
6C		Fixed data-1
6D	7B	Filter f_0 adj.
6E	60	RP filter f_0 adj.
6F		Fixed data-1
70		(Initialized data)
71		
72		
73	70	REC Y current adj.
74	70	
75	70	
76	70	
77	63	
78	6B	
79	63	
7A	6B	

Address	Initial value	Remark
7B	C0	REC L level adj.
7C	C0	
7D	C0	
7E	C0	
7F	7C	
80	7C	
81	7C	
82	7C	
83	96	
84	96	
85	80	REC C current adj.
86		Fixed data-1
87		(Initialized data)
88		
89		
8A		
8B		
8C		Fixed data-2
8D		Fixed data-1
8E		(Initialized data)
8F		
90		
91		
92		
93		
94		Fixed data-2
95		Fixed data-1
96		(Initialized data)
97		
98		Fixed data-2
99		Fixed data-1
9A		(Initialized data)
9B		
9C		
9D		
9E		
9F		
A0		Fixed data-2
A1		Fixed data-1
A2		(Initialized data)
A3		
A4		
A5		
A6		
A7		
A8		
A9		
AA		
AB		
AC		
AD		
AE		
AF		
B0		
B1		
B2		

Address	Initial value	Remark
B3		Fixed data-1
B4		(Initialized data)
B5		
B6		
B7		
B8		
B9		
BA		
BB		
BC		
BD		
BE		
BF		
C0		
C1		
C2		
C3		
C4		
C5		
C6		
C7		
C8		
C9		
CA		
CB		
CC		
CD		
CE		
CF		
D0		
D1		
D2		
D3		
D4		
D5		
D6		
D7		Fixed data-2
D8		(Modified data, copy the data built in
D9		the same model.)
DA		
DB		Fixed data-1
DC		
DD		
DE		Fixed data-2
DF		Fixed data-1
E0		(Initialized data)
E1		
E2		
E3		
E4		
E5		
E6		
E7		
E8		
E9		Fixed data-2
EA		Fixed data-1

Address	Initial value	Remark
EB		Fixed data-2
EC		Fixed data-1
ED		(Initialized data)
EE		
EF		
F0		
F1		
F2		
F3		
F4		
F5		
F6		
F7		
F8	00	Flange back adj.
F9	00	
FA	02	
FB	FC	Color reproduction adj.
FC	F2	
FD		Fixed data-1
FE		(Initialized data)
FF		

Table. 5-1-3.

5. E Page Table

Note : Fixed data-1 : Initialized data. (Refer to "1. Initializing the D,E,F Page Data".)
Fixed data-2 : Modified data. (Refer to "2. Modification of D, E, F Page Data".)

Address	Initial value	Remark
00		Fixed data-1
01		(Initialized data)
02		
03		
04		
05		
06		
07		
08		
09		
0A		
0B		Fixed data-2
0C		Fixed data-1
0D		(Initialized data)
0E		
0F		Fixed data-2
10		Fixed data-1
11		(Initialized data)
12		Fixed data-2
13		Fixed data-1
14		(Initialized data)
15		
16		Fixed data-2
17		Fixed data-1
18		(Initialized data)
19		
1A		
1B		
1C		
1D		
1E		
1F		
20		
21		
22		
23		
24		
25		
26		
27		
28		
29		
2A		
2B		
2C		
2D		
2E		
2F		Fixed data-2
30		(Modified data, copy the data built in the same model.)
31		Fixed data-1
32		Fixed data-2

Address	Initial value	Remark
33		Fixed data-1
34		(Initialized data)
35		
36		
37		
38		
39		
3A		
3B		
3C		
3D		
3E		
3F		
40		
41		
42		
43		
44		
45		
46		
47		
48		
49		
4A		
4B		
4C		
4D		
4E		Fixed data-2
4F		Fixed data-1
50		(Initialized data)
51		
52		
53		
54		
55		
56		
57		
58		
59		
5A		
5B		
5C		
5D		
5E		
5F		
60		
61		
62		
63		
64		
65		
66		
67		
68		
69		
6A		Fixed data-2

Address	Initial value	Remark
6B		Fixed data-2
6C		Fixed data-1
6D		
6E		Fixed data-2
6F		
70		Fixed data-1
71		(Initialized data)
72		
73		
74		
75		
76		
77		
78		
79		
7A		
7B		
7C		
7D		
7E		
7F		
80		
81		
82		
83		
84		
85		
86		
87		
88		
89		
8A		
8B		
8C		
8D		
8E		
8F		
90		
91		
92		
93		
94		
95		
96		
97		
98		
99		
9A		
9B		
9C		
9D		
9E		
9F		
A0		
A1		
A2		

Address	Initial value	Remark
A3		Fixed data-1
A4		(Initialized data)
A5		
A6		
A7		
A8		
A9		
AA		
AB		
AC		
AD		Fixed data-2
AE		(Modified data, copy the data built in the same model.)
AF		Fixed data-1
B0		(Initialized data)
B1		
B2		
B3		
B4		
B5		
B6		
B7		
B8		
B9		
BA		
BB		
BC		
BD		
BE		
BF		
C0		
C1		
C2		
C3		Fixed data-2
C4		(Modified data, copy the data built in the same model.)
C5	70	VCO adj. (Color EVF)
C6	77	Bright adj. (Color EVF)
C7	80	Contrast adj. (Color EVF)
C8	80	White balance adj. (Color EVF)
C9	80	
CA		Fixed data-2
CB		Fixed data-1
CC		
CD		
CE		Fixed data-2
CF	90	Backlight consumption current adj. (Color EVF)
D0		Fixed data-1
D1		(Initialized data)
D2		
D3		
D4		
D5		
D6		
D7		

Address	Initial value	Remark
D8		Fixed data-1
D9		(Initialized data)
DA		
DB		
DC		
DD		
DE		
DF		
E0		
E1		
E2		
E3		
E4		
E5		
E6		
E7		
E8		
E9		
EA		
EB		
EC		
ED		
EE		
EF		
F0		
F1		
F2		
F3		
F4		
F5		
F6		
F7		
F8		
F9		
FA		
FB		
FC		
FD		Fixed data-2
FE		(Modified data, copy the data built in the same model.)
FF	A0	Backlight consumption current adj. (Color EVF)

Table. 5-1-4.

1-3. CAMERA SYSTEM ADJUSTMENTS

Before perform the camera system adjustments, Check that the specified value of "28MHz Origin Oscillation Adjustment", "Y OUT level Adjustment" and "C OUT level Adjustment" of "VIDEO SYSTEM ADJUSTMENT" are satisfied.

1. HALL Adjustment

For detecting the position of the lens iris, adjust the hall AMP gain and offset.

Subject	Not required
Measurement Point	Display data of page 1
Measuring Instrument	Adjustment remote commander
Adjustment Page	F
Adjustment Address	47, 48
Specified Value	86 to 8A during IRIS OPEN 15 to 19 during IRIS CLOSE

Note : Displayed data of page 1 of the adjustment remote commander.

1 : 00 : XX
└── Display data

Adjusting method:

1) Select page: 0, address: 01, and set data: 01.
2) Select page: 6, address: 01, set data: 6D, and press the PAUSE button of the adjustment remote commander. (The HALL adjustment is performed and the adjustment data is stored in page: F, address: 47 and 48.)
3) Select page: 6, address: 02, and check that the data is "01".
4) Select page: 6, address: 01, set data: 00, and press the PAUSE button.

Checking method:

1) Select page: 0, address: 03, and set data: 03.
2) Select page: 6, address: 01, set data: 01, and press the PAUSE button.
3) Select page: 1, and check that the display data (Note) during IRIS OPEN satisfies the specified value.
4) Select page: 6, address: 01, set data: 03, and press the PAUSE button.
5) Select page: 1, and check that the display data during IRIS CLOSE satisfies the specified value.

Processing after Completing Adjustments

1) Select page: 6, address: 01, set data: 00, and press the PAUSE button.
2) Select page: 0, address: 01, and set data: 00.
3) Select page: 0, address: 03, and set data: 00.

2. Flange Back Adjustment

The inner focus lens flange back adjustment is carried out automatically. In whichever case, the focus will be deviated during auto focusing/manual focusing.

2-1. Flange Back Adjustment(1)

Subject	Flange back adjustment chart (2.0 m from the front of the lens) (Luminance: 350 ± 50 lux)
Measurement Point	Check operation on TV monitor
Measuring Instrument	
Adjustment Page	F
Adjustment Address	38 to 3D, 5A to 5E, F8 to FA

Switch setting:

1) NIGHT SHOT ..... OFF
2) DIGITAL ZOOM (Menu display) ..... OFF
3) STEADY SHOT (Menu display) ..... OFF
4) VIDEO LIGHT ..... OFF

Adjusting method:

1) Check that at both the zoom lens TELE end and WIDE end, the center of the chart for the flange back adjustment and center of the exposure screen coincide.
2) Select page: 0, address: 01, and set data: 01.
3) Check that the data of page: F, address:38 to 3D, 5A to 5E, F8 to FA is the initial value (See table below).

Address	Data	Address	Data
38	1C	5B	00
39	03	5C	19
3A	25	5D	00
3B	24	5E	37
3C	11	F8	00
3D	05	F9	00
5A	2A	FA	02

4) Select page: 6, address: 02, and check that the data is "00".
5) Select page: 6, address: 01, set data: 13, and press the PAUSE button of the adjustment remote commander.
6) Select page: 6, address: 01, set data: 15, and press the PAUSE button.
   (The adjustment data will be automatically input to page: F, addresses:38 to 3D, 5A to 5E, F8 to FA.)
7) Select page: 6, address: 02, and check that the data is "01".

Processing after Completing Adjustments

1) Turn OFF the main power supply (8.4V).
2) Perform "Flange Back Adjustment (2)".

2-2. Flange Back Adjustment (2)

Perform this adjustment after performing "Flange Back Adjustment (1)".

Subject	Subject more than 500m away (Subjects with clear contrast such as buildings, etc.)
Measurement Point	Check operation on TV monitor
Measuring Instrument	
Adjustment Page	F
Adjustment Address	38 to 3D, 5A to 5E, F8 to FA

Switch setting:

1) NIGHT SHOT ..... OFF
2) DIGITAL ZOOM (Menu display) ..... OFF
3) STEADY SHOT (Menu display) ..... OFF
4) VIDEO LIGHT ..... OFF

Adjusting method:

1) Set the zoom lens to the TELE end and expose a subject that is more than 500 m away (subject with clear contrast such as building, etc.). (Nearby subjects less than 500 m away should not be in the screen.)
2) Select page: 0, address: 01, and set data: 01.
3) Select page: 6, address: 02, and check that the data is "00".
4) Select page: 6, address: 01, set data: 13, and press the PAUSE button of the adjustment remote commander.
5) Place a ND filter on the lens so that the optimum image is obtain.
6) Select page: 6, address: 01, set data: 29, and press the PAUSE button.
   (The adjustment data will be automatically input to page: F, addresses:38 to 3D, 5A to 5E, F8 to FA.)
7) Select page: 6, address: 02, and check that the data is "01".

Processing after Completing Adjustments

1) Select page: 0, address: 01, and set data: 00.
2) Turn OFF the main power supply (8.4V).
3) Perform "Flange Back Check".

3. Flange Back Check

Subject	Siemens star (2.0 m from the front of the lens) (Luminance : approx. 200 lux)
Measurement Point	Check operation on TV monitor
Measuring Instrument	
Specified Value	Focused at the TELE end and WIDE end.

Switch setting:

1) NIGHT SHOT ..... OFF
2) DIGITAL ZOOM (Menu display) ..... OFF
3) STEADY SHOT (Menu display) ..... OFF
4) VIDEO LIGHT ..... OFF

Checking method:

1) Place the Siemens star 2.0m from the front of the lens.
2) To open the IRIS, decrease the luminous intensity to the Siemens star up to a point before noise appear on the image.
3) Shoot the Siemens star with the zoom TELE end.
4) Turn on the auto focus.
5) Check that the lens is focused (Note).
6) Select page: 6, address: 21, and set data: 10.
7) Shoot the Siemens star with the zoom WIDE end.
8) Observe the TV monitor and check that the lens is focused.

Note: When the auto focus is ON, the lens can be checked if it is focused or not by observing the data on the page 1 of the adjustment remote commander.
1) Select page: 0, address: 03, and set data: 0F.
2) Page 1 shows the state of the focus.

1 : 00 : XX
- Odd: Focused
- Even: Unfocused

Processing after Completing Adjustments

1) Select page: 6, address: 21, and set data: 00.
2) Select page: 0, address: 03, and set data: 00.

4. Picture Frame Setting

Subject	Color bar chart (Color reproduction adjustment frame) (1.5m from the front of the lens)
Measurement Point	Video output terminal
Measuring Instrument	Oscilloscope and TV monitor
Specified Value	A=B, C=D, E=F, t=0 ± 0.1msec

Switch setting:

1) NIGHT SHOT ..... OFF
2) DIGITAL ZOOM (Menu display) ..... OFF
3) STEADY SHOT (Menu display) ..... OFF
4) VIDEO LIGHT ..... OFF

Setting method:

1) Adjust the zoom and the camera direction, and set to the specified position.
2) Mark the position of the picture frame on the monitor display, and adjust the picture frame to this position in following adjustments using “Color reproduction adjustment frame”.

Check on the oscilloscope

1. Horizontal period

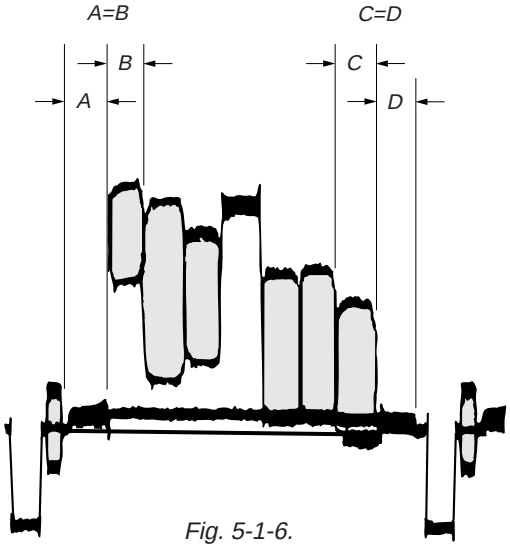

Fig. 5-1-6.

2. Vertical period

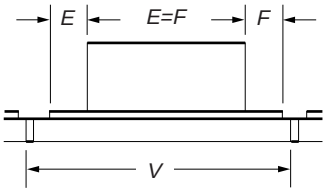

Fig. 5-1-7.

Check on the monitor TV (Underscanned mode)

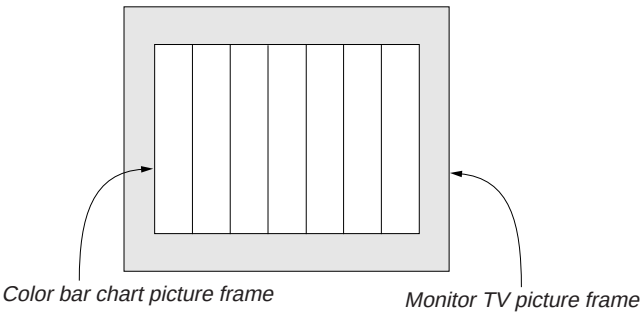

Fig. 5-1-8.

5. AGC Gain Calibration Adjustment

Subject	Clear chart (Color reproduction adjustment frame)
Adjustment Page	F
Adjustment Address	2E, 2F, 30, 31

Switch setting:

1) NIGHT SHOT ..... OFF
2) DIGITAL ZOOM (Menu display) ..... OFF
3) STEADY SHOT (Menu display) ..... OFF
4) VIDEO LIGHT ..... OFF

Adjusting method:

1) Select page: 0, address: 01, and set data: 01.
2) Select page: 6, address: 01, set data: 71, and press the PAUSE button of the adjusting remote commander.
   (When the adjustment data is take in, the data will be automatically input to page: F, address: 2E to 31.)
3) Select page: 6, address: 02, and check that the data is “01”.

Processing after Completing Adjustments

1) Select page: 6, address: 01, and set data: 00, and press the PAUSE button of the adjusting remote commander.
2) Select page: 0, address: 01, and set data: 00.

6. Color Reproduction Adjustment

Adjust the color Separation matrix coefficient so that proper color reproduction is produced.

Subject	Color bar chart (Color reproduction adjustment frame)
Measurement Point	Video output terminal
Measuring Instrument	Vectorscope
Adjustment Page	F
Adjustment Address	4E, 50, FB, FC
Specified Value	All color luminance points should settle within each color reproduction frame.

Switch setting:

1) NIGHT SHOT ..... OFF
2) DIGITAL ZOOM (Menu display) ..... OFF
3) STEADY SHOT (Menu display) ..... OFF
4) VIDEO LIGHT ..... OFF

Adjusting method:

1) Select page: 0, address: 01, and set data: 01.
2) Select page: F, address: E1, set data: 1B, and press the PAUSE button of the adjustment remote commander.
3) Select page: F, address: 27, set data: 3F, and press the PAUSE button.
4) Select page: 6, address: 01, set data: 3D, and press the PAUSE button.
5) Adjust the GAIN and PHASE of the vectorscope, and adjust the burst luminance point to the burst position of the color reproduction frame.
6) Change the data of page: F, address: 4E, 50, FB and FC, and settle each color luminance point in each color reproduction frame.

Note: Be sure to press the PAUSE button of the adjustment remote commander before changing the addresses. If not, the new data will not be written to the memory.

Processing after Completing Adjustments

1) Select page: 6, address: 01, set data: 00, and press the PAUSE button of the adjustment remote commander.
2) Select page: F, address: E1, set data: 1E, and press the PAUSE button.
3) Select page: 0, address: 01, and set data: 00.

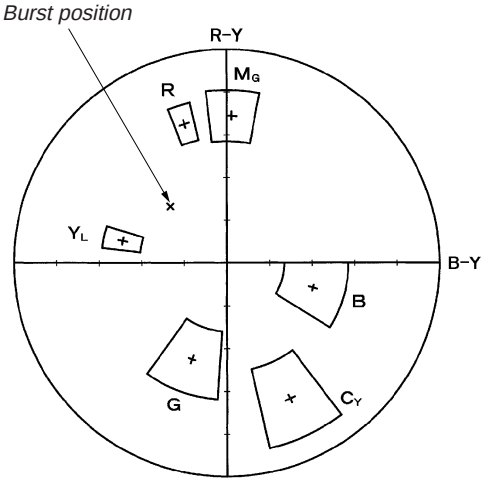

Fig. 5-1-9.

7. IRIS IN/OUT Adjustment

For the unit to judge if the white balance is indoors or outdoors in auto white balance operations, measure the light level and write it in the EEPROM.
If the level is not correct, the white balance will not be accurate.

Subject	Clear chart (Color reproduction adjustment frame)
Measurement Point	DDS display of LCD or TV monitor (Note)
Measuring Instrument	
Adjustment Page	F
Adjustment Address	56, 57

Note: The right four digits of the DDS display data of LCD or TV monitor.

00 XX XX
- Lower two digits
- Upper two digits

Switch setting:

1) NIGHT SHOT ..... OFF
2) DIGITAL ZOOM (Menu display) ..... OFF
3) STEADY SHOT (Menu display) ..... OFF
4) VIDEO LIGHT ..... OFF

Adjusting method:

1) Select page: 0, address: 01, and set data: 01.
2) Select page: 0, address: 03, and set data: 06.
3) Select page: D, address: 11, set data: 02, and press the PAUSE button of the adjustment remote commander.
4) Select page: 6, address: 01, set data: 0B, and press the PAUSE button.
5) Read the DDS display data (Note), and take the upper two digits as D_1 and the lower two as D_2.
6) Convert D_1 to decimal notation, and obtain D_1'. (Refer to Table 5-4-1. "Hexadecimal - decimal conversion table" of "5-4. Service Mode".)
7) Calculate D_3' using the following equations. (Equations 1 and 2 are for decimal notation calculation).
   When $D_2 \geqq D0$
   $D_3' = D_1' - 21$ Equation 1
   When $D_2 < D0$
   $D_3' = D_1' - 22$ Equation 2
8) Convert D_3' to hexadecimal notation, and obtain D_3.
9) Select page: F, address: 56, set data: D_3, and press the PAUSE button.
10) Select page: 6, address: 01, set data: 09, and press the PAUSE button.
11) Read the DDS display data (Note), and take the upper two digits as D_4 and the lower two as D_5.
12) Convert D_4 to decimal notation, and obtain D_4'. (Refer to Table 5-4-1. "Hexadecimal - decimal conversion table" of "5-4. Service Mode".)
13) Calculate D_6' using the following equations. (Equations 3 and 4 are for decimal notation calculation).
   When $D_5 \geqq F0$
   $D_6' = D_4' - 13$ Equation 3
   When $D_5 < F0$
   $D_6' = D_4' - 14$ Equation 4
14) Convert D_6' to hexadecimal notation, and obtain D_6.
15) Select page: F, address: 57, set data: D_6, and press the PAUSE button.

Processing after Completing Adjustments

1) Select page: D, address: 11, set data: 00, and press the PAUSE button of the adjustment remote commander.
2) Select page: 0, address: 01, and set data: 00.
3) Select page: 0, address: 03, and set data: 00.
4) Select page: 6, address: 01, set data: 00, and press the PAUSE button.

8. MAX GAIN Adjustment

Setting the minimum illumination.
If it is not consistent, the image level required for taking subjects in low illuminance will not be produced (dark).

Subject	Clear chart (Color reproduction adjustment frame)
Measurement Point	DDS display of LCD or TV monitor
Measuring Instrument	(Note)
Adjustment Page	F
Adjustment Address	49
Specified Value	C0 to FF

Note: The right two digits of the DDS display data is the object data.

00 00 XX
└──── Object data

Switch setting:

1) NIGHT SHOT ..... OFF
2) DIGITAL ZOOM (Menu display) ..... OFF
3) STEADY SHOT (Menu display) ..... OFF
4) VIDEO LIGHT ..... OFF

Adjusting method:

1) Select page: 0, address: 01, and set data: 01.
2) Select page: D, address: 11, set data: 02, and press the PAUSE button of the adjustment remote commander.
3) Select of page: 0, address: 03, and set data: 01.
4) Select page: 6, address: 56, and set data: 40.
5) Select page: 6, address: 01, set data: 19, and press the PAUSE button of the adjustment remote commander.
6) Select page: F, address: 49, set data: 08, and press the PAUSE button.
7) Check that the DDS display data (Note) lies within the specified value.

Processing after Completing Adjustments

1) Select page: D, address: 11, set data: 00, and press the PAUSE button of the adjustment remote commander.
2) Select page: 0, address: 01, and set data: 00.
3) Select page: 0, address: 03, and set data: 00.
4) Select page: 6, address: 01, set data: 00, and press the PAUSE button.
5) Select page: 6, address: 56, and set data: 00.

9. Auto White Balance Standard Data Input

Subject	Clear chart (Color reproduction adjustment frame)
Adjustment Page	F
Adjustment Address	32 to 35

Note 1: This adjustment should be carried out upon completion of "6. Color Reproduction Adjustment".

Note 2: Check that the data of page: 6, address: 02 is "00". If not, select page: 6, address: 01, set data: 00, and press the PAUSE button of the adjustment remote commander.

Switch setting:

1) NIGHT SHOT ..... OFF
2) DIGITAL ZOOM (Menu display) ..... OFF
3) STEADY SHOT (Menu display) ..... OFF
4) VIDEO LIGHT ..... OFF

Adjusting method:

1) Select page: 0, address: 01, and set data: 01.
2) Wait for 2 seconds.
3) Select page: 6, address: 01, set data: 11, and press the PAUSE button of the adjustment remote commander.
4) Select page: 6, address: 01, set data: 0D, and press the PAUSE button.
   (When the standard data is take in, the data will be automatically input to page: F, address: 32 to 35.)
5) Select page: 6, address: 02, and check that the data is "01".
6) Perform "Auto White Balance Adjustment".

Processing after Completing Adjustments

1) Select page: 6, address: 01, set data: 00, and press the PAUSE button of the adjustment remote commander.
2) Select page: 0, address: 01, and set data: 00.

10. Auto White Balance Adjustment

Adjust to the proper auto white balance output data.
If it is not correct, auto white balance and color reproducibility will be poor.

Subject	Clear chart (Color reproduction adjustment frame)
Filter	Filter C14 for color temperature correction
Measurement Point	DDS display of LCD or TV monitor
Measuring Instrument	(Note 2)
Adjustment Page	F
Adjustment Address	54, 55
Specified Value	R ratio: 2C40 to 2CC0 B ratio: 5E40 to 5EC0

Note 1: Perform "Auto White Balance Standard Data Input" before this adjustment.

Note 2: The right four digits of the DDS display data is the object data.

00 XXXX
└──── Object data

Switch setting:

1) NIGHT SHOT ..... OFF
2) DIGITAL ZOOM (Menu display) ..... OFF
3) STEADY SHOT (Menu display) ..... OFF
4) VIDEO LIGHT ..... OFF

Adjusting method:

1) Place the C14 filter for color temperature correction on the lens.
2) Select page: 0, address: 01, and set data: 01.
3) Select page: D, address: 11, set data: 02, and press the PAUSE button of the adjustment remote commander.
4) Select page: 6, address: 01, set data: 3F, and press the PAUSE button.
5) Select page: 0, address: 03, and set data: 04.
6) Select page: F, address: 54, change the data, and adjust the average value of the DDS display data (Note 2) to the R ratio specified value.
7) Press the PAUSE button.
8) Select page: 0, address: 03, and set data: 05.
9) Select page: F, address: 55, change the data, and adjust the average value of the DDS display data (Note 2) to the B ratio specified value.
10) Press the PAUSE button.

Processing after Completing Adjustments

1) Select page: D, address: 11, set data: 00, and press the PAUSE button of the adjustment remote commander.
2) Select page: 0, address: 01, and set data: 00.
3) Select page: 0, address: 03, and set data: 00.
4) Select page: 6, address: 01, set data: 00, and press the PAUSE button.

11. White Balance Check

Subject	Clear chart (Color reproduction adjustment frame)
Filter	Filter C14 for color temperature correction ND filter 1.0 and 0.3
Measurement Point	Video output terminal
Measuring Instrument	Vectorscope
Specified Value	Fig. 5-1-10. A to C

Switch setting:

1) NIGHT SHOT ..... OFF
2) DIGITAL ZOOM (Menu display) ..... OFF
3) STEADY SHOT (Menu display) ..... OFF
4) VIDEO LIGHT ..... OFF

Checking method:

1) Check that the lens is not covered with either filter.
2) Select page: 6, address: 01, set data: 0F, and press the PAUSE button of the adjustment remote commander.
3) Check that the center of the white luminance point is within the circle shown Fig. 5-1-10. (A).
4) Select page: 6, address: 01, set data: 00, and press the PAUSE button.
5) Select page: 6, address: 01, set data: 23, and press the PAUSE button.
6) Place the C14 filter on the lens.
7) Check that the center of the white luminance point settles in the circle shown Fig. 5-1-10. (B).
8) Remove the C14 filter, and place the ND filter 1.3 (1.0 +0.3) on the lens.
9) Check that the white luminance point stopped moving, and then remove the ND filter 1.3.
10) Check that the center of the white luminance point settles within the circle shown Fig. 5-1-10. (C).

Processing after Completing Adjustments

1) Select page: 6, address: 01, set data: 00, and press the PAUSE button of the adjustment remote commander.

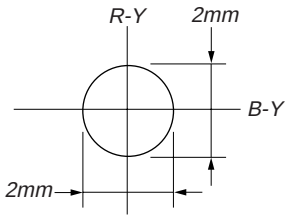

Fig. 5-1-10. (A)

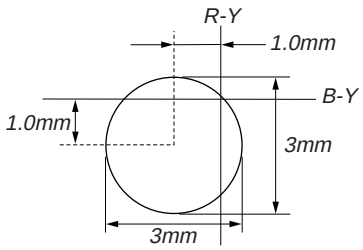

Fig. 5-1-10. (B)

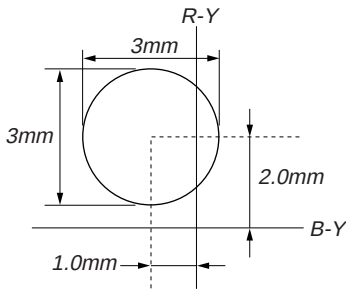

Fig. 5-1-10. (C)

12. Angular Velocity Sensor Sensitivity Preset and Steady Shot Check

Check the output of the angular velocity sensor.

Precautions on the Parts Replacement

There are two types of repair parts.

Type A ENC03JA
Type B ENC03JB

Replace the broken sensor with a same type sensor. If replace with other type parts, the image will vibrate up and down or left and right during hand-shake correction operations.

Precautions on Angular Velocity Sensor

The sensor incorporates a precision oscillator. Handle it with care as if it dropped, the balance of the oscillator will be disrupted and operations will not be performed properly.

Subject	Arbitrary
Measurement Point	Display data of page 1 (Note)
Measuring Instrument	Adjustment remote commander
Adjustment Page	F
Adjustment Address	5F, 60
Specified Value	PITCH data : 3000 to 4600 YAW data : 3000 to 4600

Note: Displayed data of page 1 of the adjustment remote commander.

1 : XX : XX
└──── Display data

Switch setting:

1) ZOOM ..... Center
2) STEADY SHOT (Menu display) ..... ON

Checking method:

1) Select page: 0, address: 01, and set data: 01.
2) Select page: F, address: 5F, set data: 76, and press the PAUSE button of the adjustment remote commander.
3) Select page: F, address: 60, set data: 63, and press the PAUSE button of the adjustment remote commander.
4) Select page: 0, address: 03, and set data: 11.
5) Select page: 1, and check that the PITCH data satisfies the specified value.
6) Select page: 0, address: 03, and set data: 12.
7) Select page: 1, and check that the YAW data satisfies the specified value.

Processing after Completing Adjustments

1) Select page: 0, address: 01, and set data: 00.
2) Select page: 0, address: 03, and set data: 00.
3) Check that the steady shot operations have been performed normally.

1-4. COLOR ELECTRONIC VIEWFINDER SYSTEM ADJUSTMENT (CCD-TR950E)

Note 1: The back light (fluorescent tube) is driven by a high voltage AC power supply. Therefore, do not touch the back light holder to avoid electrical shock.

Note 2: When replacing the LCD unit, be careful to prevent damages caused by static electricity.

[Adjusting connector]

Most of the measuring points for adjusting the viewfinder system are concentrated in CN910 of the VC-214 board.
Connect the Measuring Instruments via the CPC-7 jig (J-6082-382-A).
The following table shows the Pin No. and signal name of CN910.

Pin No.	Signal Name	Pin No.	Signal Name
1	LANC SIG	9	RF AGC OUT
2	XCPC IN	10	REC RF
3	IR VIDEO	11	RF SWP
4	AFC F0	12	CAP FG
5	BPF MONI	13	EVF BL
6	PB RF	14	EVF BL 4.75V
7	RF AGC IN	15	VCO
8	REG GND	16	EVF VG

Table 5-1-5.

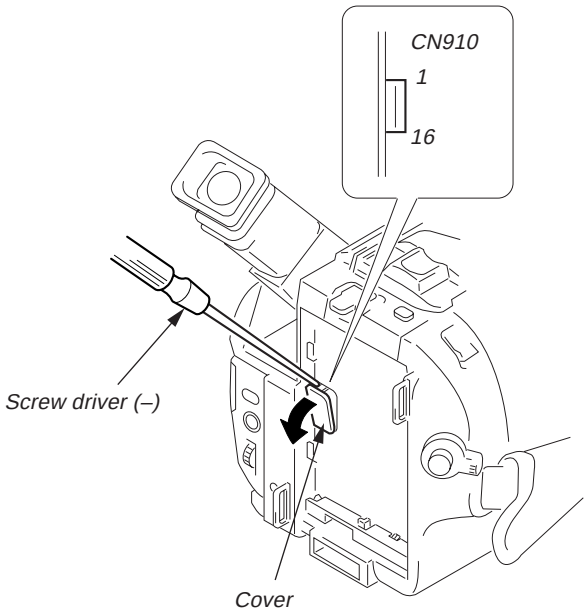

Fig. 5-1-11.

1. EVF Initial Data Input

Mode	Camera
Subject	Arbitrary
Adjustment Page	E
Adjustment Address	C5 to D0, FF

Adjusting method:

1) Select page: 0, address: 01, and set data: 01.
2) Select page: E, and input the data in the following table.
   Note: To write in the non-volatile memory (EEPROM), press the PAUSE button of the adjustment remote commander each time to set the data.
3) Select page: 0, address: 01, and set data: 00.

Address	Data	Remark
C5	70	VCO adj.
C6	77	Bright adj.
C7	80	Contrast adj.
C8	80	White balance adj.
C9	80	White balance adj.
CA	6E	Fixed data
CB	50	Fixed data
CC	F8	Fixed data
CD	A8	Fixed data
CE	40	Fixed data
CF	90	Backlight consumption current adj.
D0	70	Fixed data
FF	A0	Backlight consumption current adj.

2. VCO Adjustment (VF-126 board)

Set the VCO free-run frequency. If deviated, the EVF screen will be blurred.

Mode	Camera
Subject	Arbitrary
Measurement Point	Pin ⑮ of CN910 (VCO) on VC-214 board
Measuring Instrument	Oscilloscope (DC range)
Adjustment Page	E
Adjustment Address	C5
Specified Value	A=1.8 ± 0.1V

Adjusting method:

1) Select page: 0, address: 01, and set data: 01.
2) Select page: 2, address: 01, set data: 55, and press the PAUSE button of the adjustment remote commander.
3) Check the GND level of the oscilloscope.
4) Select page: E, address: C5, change the data and set the VCO output voltage (A) to the specified value.
5) Press the PAUSE button.
6) Select page: 2, address: 01, set data: 00, and press the PAUSE button.
7) Select page: 0, address: 01, and set data: 00.

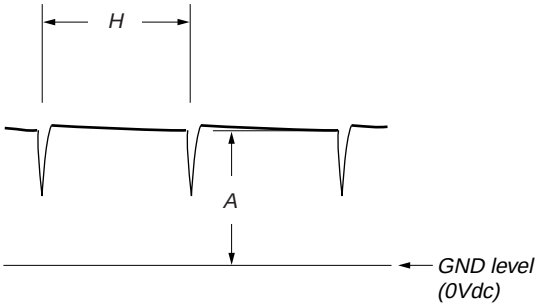

Fig. 5-1-12.

3. Bright Adjustment (VF-126 board)

Set the level of the VIDEO signal for driving the LCD to the specified value. If deviated, the screen image will be blackish or saturated (whitish).

Mode	Camera
Subject	Arbitrary
Measurement Point	Pin ⑯ of CN910 (EVF VG) on VC-214 board
Measuring Instrument	Oscilloscope
Adjustment Page	E
Adjustment Address	C6
Specified Value	A=7.04 ± 0.01V

Adjusting method:

1) Select page: 0, address: 01, and set data: 01.
2) Select page: 2, address: 01, set data: 55, and press the PAUSE button of the adjustment remote commander.
3) Select page: E, address: C6, change the data and set the voltage (A) between the reversed waveform pedestal and non-reversed waveform pedestal to the specified value.
4) Press the PAUSE button.
5) Select page: 2, address: 01, set data: 00, and press the PAUSE button.
6) Select page: 0, address: 01, and set data: 00.

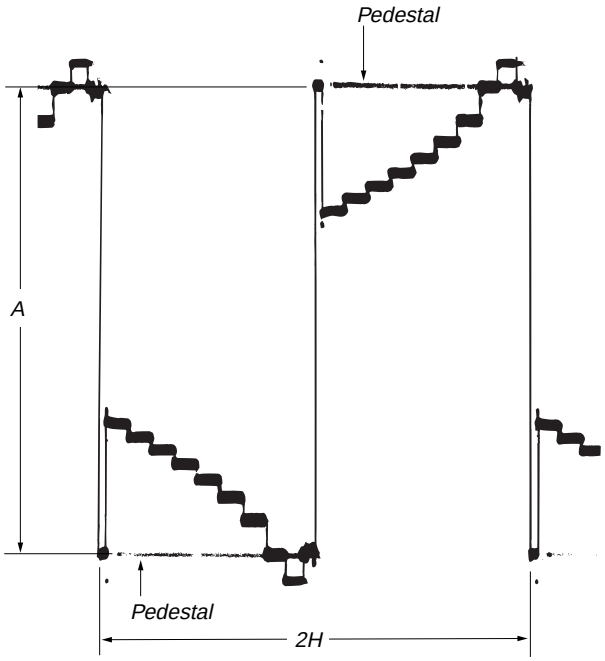

Fig. 5-1-13.

4. Contrast Adjustment (VF-126 board)

Set the level of the VIDEO signal for driving the LCD to the specified value. If deviated, the screen image will be blackish or saturated (whitish).

Mode	Camera
Subject	Arbitrary
Measurement Point	Pin ⑯ of CN910 (EVF VG) on VC-214 board
Measuring Instrument	Oscilloscope
Adjustment Page	E
Adjustment Address	C7
Specified Value	A=2.0 ± 0.1V

Adjusting method:

1) Select page: 0, address: 01, and set data: 01.
2) Select page: 2, address: 01, set data: 55, and press the PAUSE button of the adjustment remote commander.
3) Select page: E, address: C7, change the data and set the voltage (A) between the 7 step peak and the pedestal to the specified value.
4) Press the PAUSE button.
5) Select page: 2, address: 01, set data: 00, and press the PAUSE button.
6) Select page: 0, address: 01, and set data: 00.

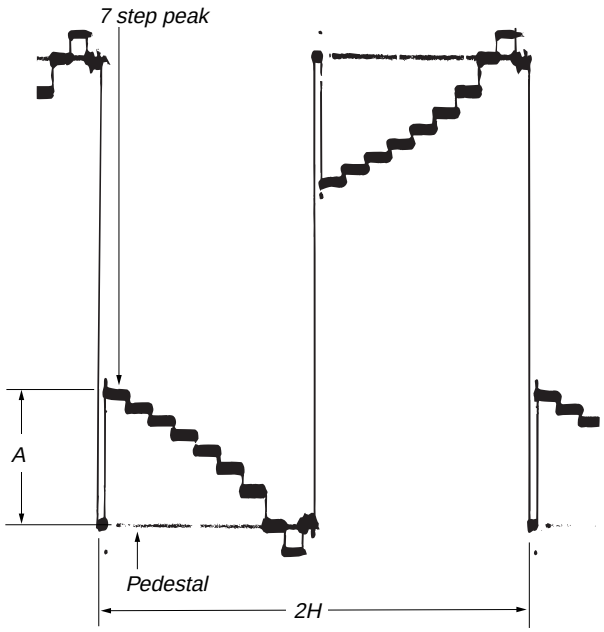

Fig. 5-1-14.

5. Backlight Consumption Current Adjustment (VF-126 board)

Set the backlight luminance and color temperature.
If deviated, the image may become dark or bright.

Mode	Camera
Subject	Arbitrary
Measurement Point	+ Probe: Pin ⑭ of CN910 (EVF BL 4.75V) on VC-214 board – Probe: Pin ⑬ of CN910 (EVF BL) on VC-214 board
Measuring Instrument	Digital voltmeter
Adjustment Page	E
Adjustment Address	CF, FF
Specified Value	NORMAL mode : A=16 ± 1mVdc BRIGHT mode : A=26 ± 1mVdc

Note : Adjust 30 seconds after running on the power supply.

Adjusting method:

1) Select page: 0, address: 01, and set data: 01.
2) Select page: 2, address: 01, set data: 55, and press the PAUSE button of the adjustment remote commander.
3) Select page: 6, address: 6F, set data: 04, and press the PAUSE button.
4) Select page: E, address: CF, change the data and set the voltage difference (A) between Pin ⑭ of CN910 (EVF BL 4.75V) and Pin ⑬ of CN910 (EVF BL) to the specified value of NORMAL mode.
5) Press the PAUSE button.
6) Select page: 6, address: 6F, set data: 02, and press the PAUSE button.
7) Select page: E, address: FF, change the data and set the voltage difference (A) between Pin ⑭ and Pin ⑬ to the specified value of BRIGHT mode..
8) Press the PAUSE button.
9) Select page: 6, address: 6F, set data: 00, and press the PAUSE button.
10) Select page: 2, address: 01, set data: 00, and press the PAUSE button.
11) Select page: 0, address: 01, and set data: 00.

6. White Balance Adjustment (VF-126 board)

Correct the white balance.
If deviated, the reproduction of the EVF screen may degenerate.

Mode	Camera
Subject	Arbitrary
Measurement Point	Check on EVF screen
Measuring Instrument	
Adjustment Page	E
Adjustment Address	C8, C9
Specified Value	The EVF screen should not be colored.

Adjusting method:

1) Select page: 0, address: 01, and set data: 01.
2) Select page: 2, address: 01, set data: 51, and press the PAUSE button of the adjustment remote commander.
3) Select page: 2, address: 7D, and set data: 03.
4) Select page: E, address: C5 and C6, set the data to the initial value.
   Note: To write in the non-volatile memory (EEPROM), press the PAUSE button of the adjustment remote commander each time to set the data.

Address	Data
C8	80
C9	80

5) Check that the EVF screen is not colored. If colored, change the data of page: E, address: C8 and C9 so that the EVF screen is not colored.
   Note: To write in the non-volatile memory (EEPROM), press the PAUSE button of the adjustment remote commander each time to set the data.
6) Select page: 2, address: 7D, and set data: 00.
7) Select page: 2, address: 01, set data: 00, and press the PAUSE button.
8) Select page: 0, address: 01, and set data: 00.

1-5. MONOCHROME ELECTRONIC VIEWFINEDER SYSTEM ADJUSTMENT (CCD-TR913E)

1-5-1. Horizontal Slant Check

Mode	Playback
Signal	Alignment tape : For checking operation (WR5-5CSP) Monoscope section
Specified Value	± 1.5°

Adjusting method:

1) Adjust RV904 (BRIGHT) (VF-129 board) so that the CRT can be seen easily and clearly.
2) Check that the difference between the horizontal line and the tilt of black mask satisfies the specified value.

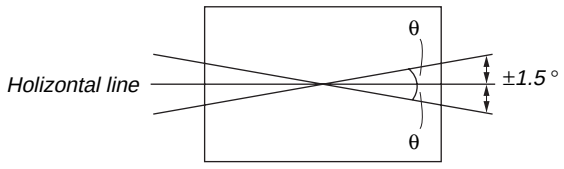

Specified value : The image should be within ± 1.5° of the holizontal line.

Fig. 5-1-15.

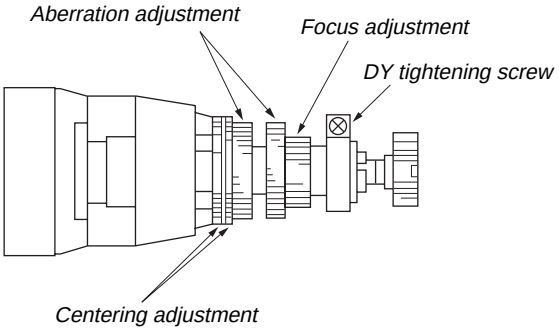

Fig. 5-1-16.

VF-129 BOARD

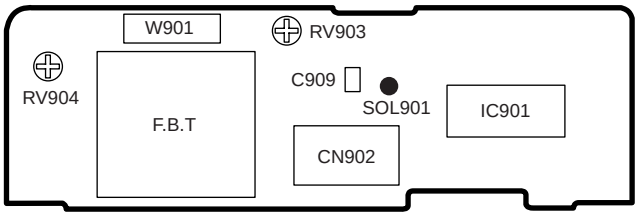

1-5-2. Centering Adjustment

Mode	Playback
Signal	Alignment tape : For checking operation (WR5-5CSP) Monoscope section
Specified Value	± 4%

Adjusting method:

1) Use the centering adjustment ring and adjust so that the left, light, top, and bottom sides of the display are uniform. (Refer to Fig. 5-1-16.)
   Note: As the centering position changes due to earth magnetism, rotate it 360° in the horizontal direction, and adjust with the center section of the modifying position.

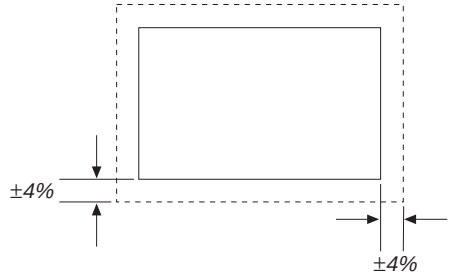

Adjustment value : ±4%

Fig. 5-1-17.

1-5-3. Focus Adjustment

Mode	Playback
Signal	Alignment tape : For checking operation (WR5-5CSP) Monoscope section

Adjusting method:

1) Adjust the focus ring to obtain the optimum focus. (Refer to Fig. 5-1-16.)

1-5-4. Aberration Adjustment

Mode	VTR stop
Signal	Dot pattern
Specified Value	b1 ≦ 2 × a1 b2 ≦ 0.8 × a2

Adjusting method:

1) Adjust the aberration adjustment ring so that the tracing of the dot satisfies the specified value.
2) If the centering becomes displaced here, perform the centering adjustment from the beginning again.

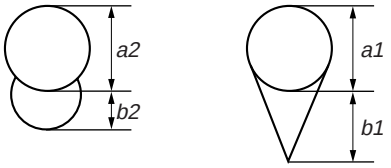

Fig. 5-1-18.

1-5-5. Horizontal Amplitude Adjustment (VF-129 board)

Mode	Playback
Signal	Alignment tape : For checking operation (WR5-5CSP) Monoscope section
Adjusting Element	C909 (SOL901)
Specified Value	10 ± 6%

Adjusting method:

1) Rotate RV903, and adjust the top and bottom side of the monoscope image to the top and bottom edges of the display.
2) Rotate RV904 so that the brightness is the normal level.
3) Solder or unsolder SOL901 pattern of the H size adjustment capacitor (C909) to “short” or “open”, so that the horizontal direction over scan becomes 10 ± 6% (Left and right totals).

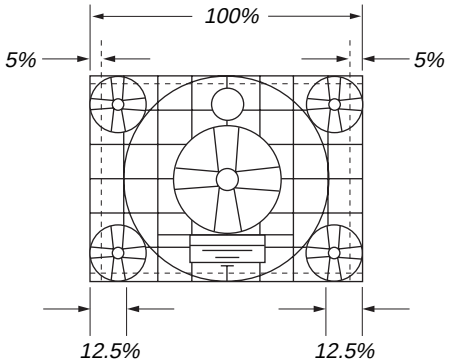

SOL901	Size H
Open	Small
Short	Big

Fig. 5-1-19.

VF-129 BOARD

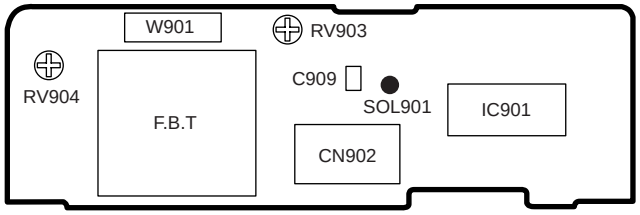

1-5-6. Vertical Amplitude Adjustment (VF-129 board)

Mode	Playback
Signal	Alignment tape : For checking operation (WR5-5CSP) Monoscope section
Adjusting Element	RV903
Specified Value	10 ± 3%

Adjusting method:

1) Adjust RV903 so that the vertical direction over scan becomes 10 ± 3% (Top and bottom totals).

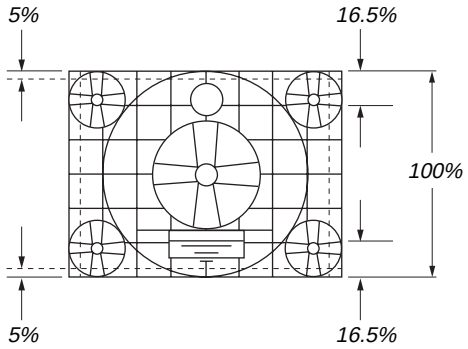

Fig. 5-1-20.

1-5-7. Brightness Adjustment (VF-129 board)

Mode	Playback
Signal	Alignment tape : For checking operation (WR5-5CSP) Monoscope section
Adjusting Element	RV904

Adjusting method:

1) Rotate RV904, and adjust so that the bright/dark sections of gray scale are displayed correctly. (The bright section should be unsatisfactory till the cross hatch appears vague in the monoscope circle. The dark section should be unsatisfactory till the darkest section of the gray scale cannot be differentiate.)

1-5-8. Horizontal Amplitude, Vertical Amplitude, Focus Check

"1-5-5. Horizontal Amplitude Adjustment" and "1-5-6. Vertical Amplitude Adjustment" should be both satisfy the specified values. If not, perform the adjustments from the beginning again. In this case, perform "1-5-7. Brightness Adjustment" again.
Moreover, check the focus, and if it found to be vague, perform "1-5-3. Focus Adjustment" and "1-5-4. Aberration Adjustment".

5-2. MECHANISM SECTION ADJUSTMENT

Mechanism Section adjustments, checks, and replacement of mechanism parts, refer to the separate volume "8mm Video Mechanism Adjustment Manual Ⅶ [B Mechanism] ".

2-1. OPERATING WITHOUT CASSETTE

1) Refer to "Section 2. DISASSEMBLY" and supply the power with the cabinet assembly removed. (So that the mechanical deck can be operated.)
2) Connect the adjustment remote commander to the LANC jack.
3) Turn on the HOLD switch of the adjustment remote commander.
4) Close the cassette compartment without loading a cassette and complete loading.
5) Select page: 0, address: 01, and set data: 01.
6) Select page: F, address: 2C, set data: 01, and press the PAUSE button of the adjustment remote commander.
7) Select page: D, address: 10, set data: 10, and press the PAUSE button of the adjustment remote commander.
8) Disconnect the power supply of the unit.
   By carrying out the above procedure, the unit can be operated without loading a cassette.
   Be sure to carry out "Processing after Operations" after checking the operations.
   Set the data of page: D, address: 10 to the following if the sensor ineffective mode, forced VTR power supply On mode or forced camera power supply ON mode are to be used together.
   Forced VTR power ON mode 12
   Forced camera power ON mode 11

[Procedure after checking operations]

1) Select page: 0, address: 01, and set data: 01.
2) Select page: F, address: 2C, set data: 00, and press the PAUSE button of the adjustment remote commander.
3) Select page: D, address: 10, set data: 00, and press the PAUSE button of the adjustment remote commander.
4) Select page: 0, address: 01, and set data: 00.
5) Disconnect the power supply of the unit.

2-2. TAPE PATH ADJUSTMENT

1. Preparations for Adjustment

1) Clean the tape path face (tape guide, capstan shaft, pinch roller).
2) Connect the adjustment remote commander to the LANC jack.
3) Turn on the HOLD switch of the adjustment remote commander.
4) Select page: 0, address: 01, and set data: 01.
5) Select page: F, address: 2C, set data: 04, and press the PAUSE button of the adjustment remote commander.
   (Be sure to perform "Processing after operation" after completing adjustments.)
6) Connect the oscilloscope to VC-214 board CN910 via CPC-7 jig (J-6082-382-A).
   Channel 1: VC-214 board, CN910 Pin ⑥
   External trigger: VC-214 board, CN910 Pin ⑪
7) Playback an alignment tape for tracking. (WR5-1CP)
8) Check that the oscilloscope RF waveform is flat at the entrance and exit.
   If not flat, adjust according to the separate volume "8mm Video Mechanical Adjustment Manual Ⅶ [B Mechanism] ".
9) Perform "Processing after operations", after completing adjustment.

CN910 of VC-214 board

Pin No.	Signal Name	Pin No.	Signal Name
1	LANC SIG	9	RF AGC OUT
2	XCPC IN	10	REC RF
3	IR VIDEO	11	RF SWP
4	AFC F0	12	CAP FG
5	BPF MONI	13	EVF BL
6	PB RF	14	EVF BL 4.75V
7	RF AGC IN	15	VCO
8	REG GND	16	EVF VG

Table 5-2-1.

[Procedure after operations]

1) Connect the adjustment remote commander, and turn on the HOLD switch.
2) Select page: 0, address: 01, and set data: 01.
3) Select page: F, address: 2C, set data: 00, and press the PAUSE button of the adjustment remote commander.
4) Select page: 0, address: 01, and set data: 00.
5) Remove the power supply from the unit.

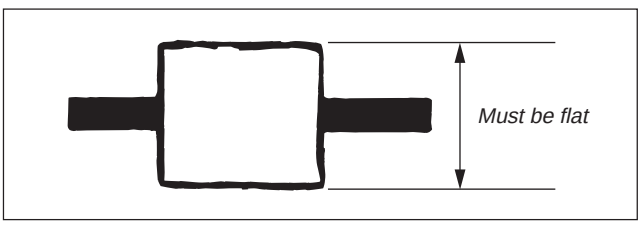

Fig. 5-2-1.

5-3. VIDEO SECTION ADJUSTMENTS

3-1. PREPARATIONS BEFORE ADJUSTMENTS

Use the following measuring instruments for video section adjustments.

3-1-1. Equipment to Required

1) TV monitor
2) Oscilloscope (dual-phenomenon, band width above 30 MHz with delay mode) (Unless specified otherwise, use a 10 : 1 probe.)
3) Frequency counter
4) Pattern generator with video output terminal
5) Digital voltmeter
6) Audio generator
7) Audio level meter
8) Audio distortion meter
9) Audio attenuator
10) Regulated power supply
11) Alignment tapes
    - For tracking adjustment (WR5-1CP)
      Parts code : 8-967-995-07
    - For video frequency characteristics adjustment (WR5-7CE)
      Parts code : 8-967-995-18
    - For checking Standard 8 mode operations
    - For LP (WR5-4CL)
      Parts code : 8-967-995-56
    - For SP (WR5-5CSP)
      Parts code : 8-967-995-47

    Note: The following alignment tapes can also be used.
      1) WR5-3CL (8-967-995-36)
      2) WR5-4CSP (8-967-995-46)

    - For checking Hi8 mode operations
    - For LP (WR5-8CLE)
      Parts code : 8-967-995-57
    - For SP (WR5-8CSE)
      Parts code : 8-967-995-48
    - For Checking AFM stereo operations (WR5-9CS)
      Parts code : 8-967-995-28
    - For BPF adjustment (WR5-11CS)
      Parts code : 8-967-995-76
12) Adjustment remote commander (J-6082-053-B)
13) CPC-7 jig (J-6082-382-A)
14) Power code (J-6082-223-A)

    Note: Connect the adjustment remote commander to the LANC jack, and set the HOLD switch to the "ADJ" side.
15) AFM DEV jig (J-6082-312-A)
16) IR receiver jig (J-6082-383-A)
17) Extension cable (70P, 0.5mm)
    For extension between the DD-117 board (CN931) and the VC-214 board (CN914) (J-6082-439-A)

3-1-2. Precautions on Adjusting

1) The adjustments of this unit are performed in the VTR mode or camera mode.
   To set to the VTR mode, set the power switch to "PLAYER" or set the "Forced VTR Power ON mode" using the adjustment remote commander (Note 1).
   To set to the Camera mode, set the power switch to "CAMERA" or set the "Forced Camera Power ON mode" using the adjustment remote commander (Note 2).
   After completing adjustments, be sure to exit the "Forced VTR Power ON Mode" or "Forced Camera Power ON Mode". (Note 3)
2) By setting the "Forced VTR Power ON mode" or "Forced Camera Power ON mode", the video section can be operate even if even if the front panel block (MA-353 board, power switch, microphone unit) has been removed. When removing the front panel block disconnect the following connector.
   1. VC-214 board CN903 (20P 0.5mm)
3) The lens block (CD-209 board) and VL-25 board need not be connected except during battery end adjustment. To remove, disconnect the following connectors.
   1. VC-214 board CN501 (16P, 0.5mm)
   2. VC-214 board CN551 (24P, 0.5mm)
   3. VL-25 board CN151 (8P, 0.5mm)
4) Cabinet (R) (Camera function switch (CF-58 board), LCD block, viewfinder) need not be connected. But removing the cabinet (R) (removing the VC-214 board CN911) means removing the lithium 3V power supply (CF-58 board BH001), data such as date, time, user-set menus will be lost. After completing adjustments, reset these data. If the cabinet (R) has been removed, the self-diagnosis data, data on history of use (total drum rotation time etc.) will be lost. Before removing, note down the self-diagnosis data and data on history use (data of page: 2, address: A2 to AA). (Refer to the "Service Mode" for the data on the history use.) To remove the cabinet (R), disconnect the following connectors.
   1. VC-214 board CN911 (50P, 0.5mm)
   2. DD-117 board CN933 (10P, 1.0mm)

Note 1: Setting the "Forced VTR Power ON" mode (VTR mode)
1) Select page: 0, address: 01, and set data: 01.
2) Select page: D, address: 10, set data: 02, and press the PAUSE button of the adjustment remote commander.
The above procedure will enable the VTR power to be turned on with the front panel block removed.
After completing adjustments, be sure to exit the "Forced VTR Power ON mode".

Note 2: Setting the "Forced Camera Power ON" mode (Camera mode)
1) Select page: 0, address: 01, and set data: 01.
2) Select page: D, address: 10, set data: 01, and press the PAUSE button of the adjustment remote commander.
The above procedure will enable the camera power to be turned on with the front panel block removed.
After completing adjustments, be sure to exit the "Forced Camera Power ON mode".

Note 3: Exiting the "Forced Power ON" mode
1) Select page: 0, address: 01, and set data: 01.
2) Select page: D, address: 10, set data: 00, and press the PAUSE button of the adjustment remote commander.
3) Select page: 0, address: 01, and set data: 00.

3-1-3. Adjusting Connectors

Some of the adjusting points of the video section are concentrated at VC-214 board CN910. Connect the measuring instruments via the CPC-7 jig (J-6082-382-A). The following table lists the pin numbers and signal names of CN910.

Pin No.	Signal Name	Pin No.	Signal Name
1	LANC SIG	9	RF AGC OUT
2	XCPC IN	10	REC RF
3	IR VIDEO	11	RF SWP
4	AFC F0	12	CAP FG
5	BPF MONI	13	EVF BL
6	PB RF	14	EVF BL 4.75V
7	RF AGC IN	15	VCO
8	REG GND	16	EVF VG

Table 5-3-1.

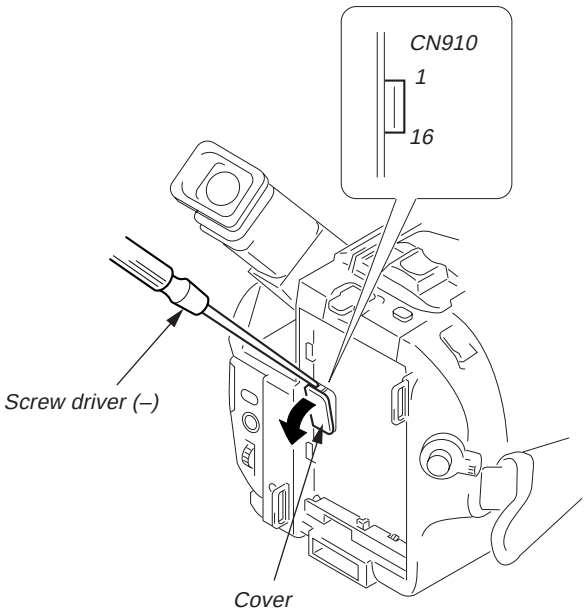

Fig. 5-3-1.

3-1-4. Connecting the Equipments

Connecting the measuring instruments as shown in Fig. 5-3-2 and perform the adjustments.

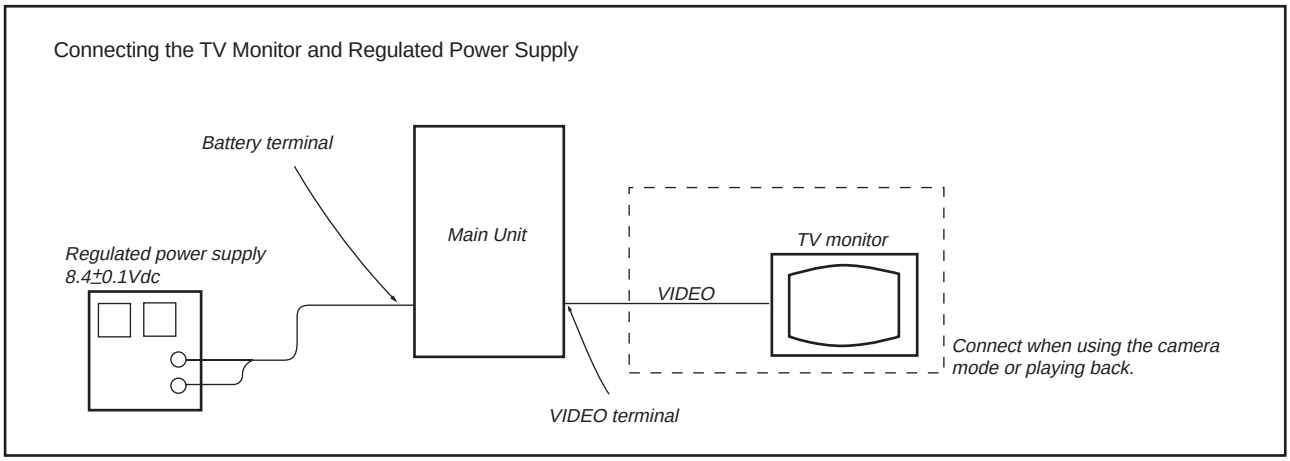

Fig. 5-3-2.

3-1-5. Alignment Tape

The following table lists alignment tapes which are available. Use the tape specified in the signal column for each adjustment. If the type of tape to be used for checking operations is not specified, use whichever type.

Name	Record-ing mode	Tape type	Tape speed	Usage
Tracking WR5-1CP	Standard 8 mm	MP	SP	Tape path adjustment Switching position adjustment
Video frequency characteristics WR5-7CE	Hi8	ME	LP	Frequency characteristics adjustment
Operation check (SP mode) WR5-5CSP	Standard 8 mm	MP	SP	Checking operations
Operation check (SP mode) WR5-8CSE	Hi8	ME	SP	
Operation check (LP mode) WR5-4CL	Standard 8 mm	MP	LP	
Operation check (LP mode) WR5-8CLE	Hi8	ME	LP	
AFM stereo Operation check WR5-9CS	Standard 8 mm	MP	SP	AFM stereo Checking operations
BPF adjustment WR5-11CS	Hi8	MP	SP	BPF adjustment

Fig. 5-3-3. Shows the color bar signals recorded on the alignment tape.

Note : Measure using the VIDEO terminal (Terminated at 75 Ω).

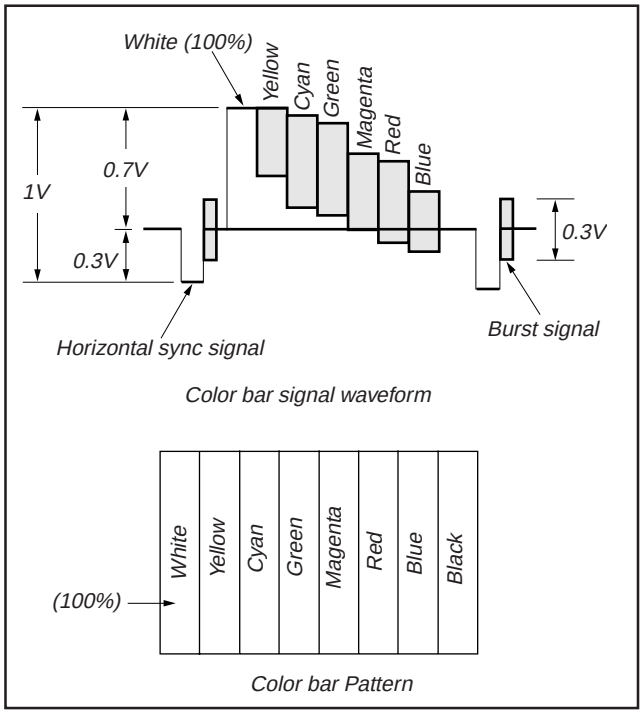

Fig. 5-3-3. Color Bar Signals of the Alignment Tape

3-1-6. Output Level and Impedance

Video output

Phono jack, 1 Vp-p, 75Ω,
unbalanced, sync negative

S video output

4-pin mini DIN

Luminance signal:

1Vp-p, 75Ω, unbalanced, sync negative

Chrominance signal:

0.286Vp-p 75Ω, unbalanced

Audio output

Phono jack,

Input: –7.5 dBs, input impedance more than 47 kΩ

Output: –7.5 dBs, (at load impedance 47 kΩ), impedance less than 2.2 kΩ

3-1-7. Recording Mode (Standard 8/Hi8) switching

The record mode (Standard 8/Hi8) of this unit switches as shown in the following table. The playback mode (Standard 8/Hi8) switches automatically according to the recording mode of the tape played back.

Tape Used	Recording Mode
ME	Hi8
Hi8 MP	
MP	Standard 8

3-2. SYSTEM CONTROL SYSTEM ADJUSTMENT

1. Initialization of D, E, F Page Data

If the D, E, F page data is erased due to some reason, perform "1-2. INITIALIZATION OF D, E, F PAGE DATA", of "5-1. CAMERA SECTION ADJUSTMENT"

2. Battery End Adjustment (VC-214 board)

Set the battery end voltage.
If the voltage is incorrect, the life of the battery will shorten.
The image at the battery end will also be rough.

Mode	Camera recording
Subject	Arbitrary
Measurement Point	LCD display of the adjustment remote commander
Measuring Instrument	
Adjustment Page	D
Adjustment Address	30 to 34

Note 1: The lens block and cabinet (R) must be connected.

Switch setting

1) AUTO FOCUS ..... OFF
2) LCD screen ..... Closed
3) NIGHT SHOT ..... OFF
4) VIDEO LIGHT ..... OFF

Connection:

1) Connect the regulated power supply and the digital voltmeter to the battery terminal as shown in Fig. 5-3-4.

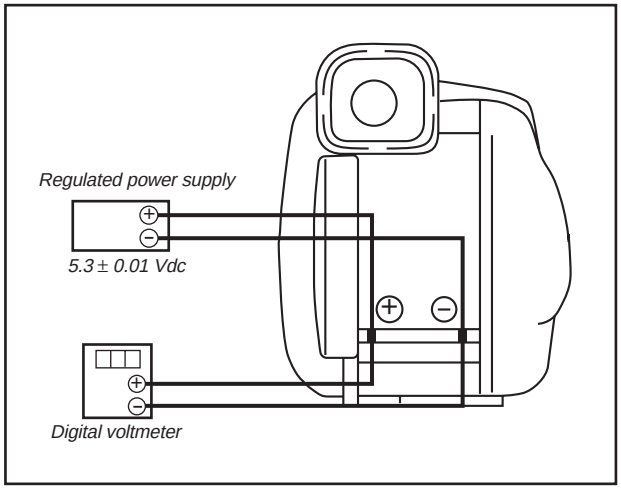

Fig. 5-3-4.

Adjusting method:

1) Adjust the output voltage of the regulated power supply so that the digital voltmeter display is 6.1 ± 0.1Vdc.
2) Turn off the power supply.
3) Turn on the HOLD switch of the adjustment remote commander.
4) Turn on the power supply.
5) Load a cassette, and set to the camera recording mode.
6) Select page: 0, address: 01, and set data: 01.
7) Decrease the output voltage of the regulated power supply so that the digital voltmeter display is 5.30 ± 0.01Vdc.
8) Select page: 2, address: 5D, read the data, and this data is named Dref.
9) Select page: D, address: 30, set data: Dref, and press the PAUSE button of the adjustment remote commander.
10) Convert Dref to decimal notation, and obtain Dref'. (Refer to Table 5-4-1. "Hexadecimal-decimal conversion table" of "5-4. Service Mode".)
11) Calculate D_{31}', D_{32}', D_{33}' and D_{34}' using following equations (decimal calculation), convert it to a hexadecimal number, and input each adjustment address.
    - Address: 31 $D_{31}' = Dref' + 5$
    - Address: 32 $D_{32}' = Dref' + 32$
    - Address: 33 $D_{33}' = Dref' + 53$
    - Address: 34 $D_{34}' = Dref' + 64$

    Note 2: After setting each data, be sure to press the PAUSE button.
12) Select page: 0, address: 01, and set data: 00.

3-3. SERVO SYSTEM ADJUSTMENTS

1. CAP FG Offset Adjustment (VC-214 board)

Improve the capstan servo characteristic. If it is not correct. jitters will increase.

Mode	Camera recording (SP mode)
Subject	Arbitrary
Measurement Point	Pin ⑫ of CN910 (CAP FG)
Measuring Instrument	Oscilloscope
Adjustment Page	F
Adjustment Address	61
Specified value	Duty = 50 ± 1 %

Adjusting method:

1) Set to the Camera recording mode (SP mode).
2) Select page: 0, address: 01, and set data: 01.
3) Select page: 6, address: 01, set data: 81, and press the PAUSE button of the adjustment remote commander. (to start up automatic CAP FG offset adjustment.)
4) Select page: 6, address: 02, and check that the data is “01”.
5) Check that Duty of CAP FG signal satisfies the specified value. If not, select page: 6, address: 01, set data: 00, and press the PAUSE button, and then, repeat steps 1) to 5).
6) Select page: 6, address: 01, set data: 00, and press the PAUSE button of the adjustment remote commander.
7) Select page: 0, address: 01, and set data: 00.

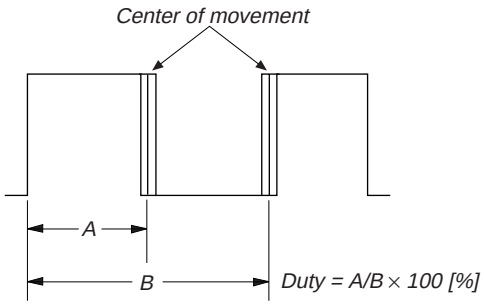

Fig. 5-3-5.

2. Switching Position Adjustment (VC-214 board)

If deviated in this case causes switching noise or jitter on the played back screen.

Mode	Playback
Signal	Alignment tape: For tracking adjustment (WR5-1CP)
Measurement Point	CH1: Pin ⑪ of CN910 (RF SWP) CH2: Pin ⑥ of CN910 (PB RF)
Measuring Instrument	Oscilloscope
Adjustment Page	F
Adjustment Address	3E, 3F
Specified Value	t1 = 0 ± 10 µsec

Adjusting Method:

1) Select page: 0, address: 01, and set data: 01.
2) Select page: F, address: 2C, set data: 20, and press the PAUSE button of the adjustment remote commander.
3) Select page: F, address: 3E, change the data and minimize “t1”, and then press the PAUSE button of the adjustment remote commander. (Coarse adjustment)
4) Select page: F, address: 3F, change the data and adjust so that the switching position (t1) becomes the specified value. (Fine adjustment)
5) Press the PAUSE button of the adjustment remote commander.
6) Select page: F, address: 2C, set data: 00, and press the PAUSE button of the adjustment remote commander.
7) Select page: 0, address: 01, and set data: 00.

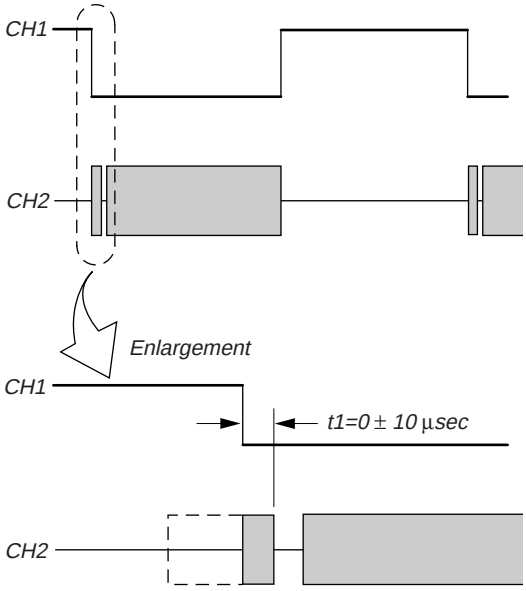

Fig. 5-3-6.

3-4. VIDEO SYSTEM ADJUSTMENTS

Video system adjustments must be performed in the following order.

[Adjusting Order]

1. 28MHz origin oscillation adjustment
2. AFC f_0 adjustment
3. Filter f_0 adjustment
4. Y OUT level adjustment
5. C OUT level adjustment
6. RP filter f_0 adjustment
7. REC Y current adjustment
8. REC L level adjustment
9. REC C current adjustment

1. 28 MHz Origin Oscillation Adjustment (VC-214 board)

Set the frequency of the clock for synchronization.
If deviated, the synchronization will be disrupted and the color will become inconsistent.

Mode	VTR stop
Signal	No signal
Measurement Point	Pin ㉜ of IC301 or pin ⑫ of IC501
Measuring Instrument	Frequency counter
Adjustment Page	F
Adjustment Address	40
Specified Value	Pin ㉜ of IC301 : f=4433594 ± 17Hz Pin ⑫ of IC501 : f=14187500 ± 55Hz

Adjusting method:

1) Select page: 0, address: 01, and set data: 01.
2) Select page: 2, address: 01, set data: 41, and press the PAUSE button of the adjustment remote commander.
3) Select page: 6, address: 61, and set data: 30.
4) Select page: F, address: 40, change the data and set the clock frequency (f) to the specified value.
5) Press the PAUSE button of the adjustment remote commander.
6) Select page: 6, address: 61, and set data: 10.
7) Select page: 2, address: 01, set data: 00, and press the PAUSE button of the adjustment remote commander.
8) Select page: 0, address: 01, and set data: 00.

VC-214 BOARD

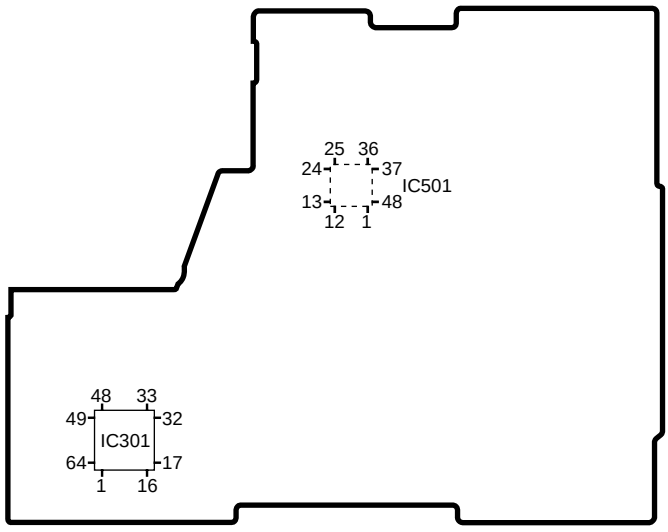

2. AFC f_0 Adjustment (VC-214 board)

Adjust the pull-in range of the A/D converted clock generator during playback.

Mode	VTR stop
Signal	No signal
Measurement Point	Pin ④ of CN910 (AFC f0)
Measuring Instrument	Digital voltmeter
Adjustment Page	F
Adjustment Address	6A
Specified Value	A=2.00 ± 0.05Vdc

Adjusting method:

1) Select page: 0, address: 01, and set data: 01.
2) Select page: 2, address: 01, set data: 4D, and press the PAUSE button of the adjustment remote commander.
3) Select page: F, address: 6A, change the data and set the DC voltage (A) to the specified value.
4) Press the PAUSE button of the adjustment remote commander.
5) Select page: 2, address: 01, set data: 00, and press the PAUSE button of the adjustment remote commander.
6) Select page: 0, address: 01, and set data: 00.

3. Filter f_0 Adjustment (VC-214 board)

Adjust the f_0 frequency of the IC151 built-in filter.

Mode	VTR stop
Signal	No signal
Measurement Point	Pin ③ of CN910 (IR VIDEO)
Measuring Instrument	Oscilloscope
Adjustment Page	F
Adjustment Address	6D
Specified Value	Minimum residual chroma signal components (A= Bellow 12mV)

Switch setting:

LASER LINK ..... ON (Red LED is lit)

Adjusting method:

1) Select page: 0, address: 01, and set data: 01.
2) Select page: 2, address: 01, set data: 4F, and press the PAUSE button of the adjustment remote commander.
3) Select page: F, address: 6D, change the data and minimize the residual chroma signal components (A).
4) Press the PAUSE button of the adjustment remote commander.
5) Select page: 2, address: 01, set data: 00, and press the PAUSE button of the adjustment remote commander.
6) Select page: 0, address: 01, and set data: 00.

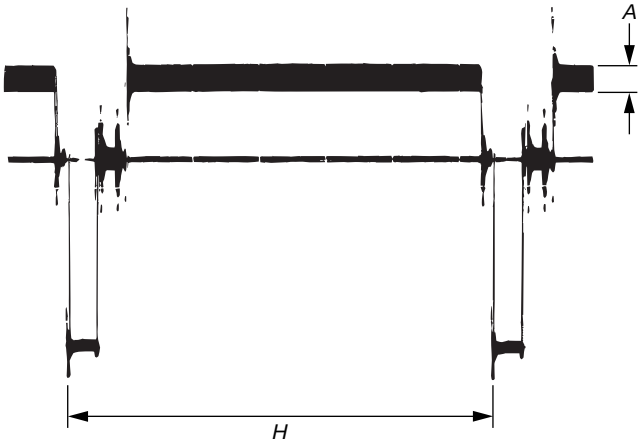

Fig. 5-3-7.

4. Y OUT Level Adjustment (VC-214 board)

Set the Y signal output level. (Adjust the D/A converter out put level of IC151.)

Mode	VTR stop
Signal	No signal
Measurement Point	Y signal terminal of S VIDEO terminal (75Ω terminated)
Measuring Instrument	Oscilloscope
Adjustment Page	F
Adjustment Address	69
Specified Value	A=300 ± 5mV

Note : Insert the plug into the S video terminal.

Adjusting method:

1) Select page: 0, address: 01, and set data: 01.
2) Select page: 2, address: 01, set data: 41, and press the PAUSE button of the adjustment remote commander.
3) Select page: 6, address: 61, and set data: 30.
4) Select page: F, address: 69, change the data and set the SYNC level (A) to the specified value.
5) Press the PAUSE button of the adjustment remote commander.
6) Select page: 6, address: 61, and set data: 10.
7) Select page: 2, address: 01, set data: 00, and press the PAUSE button of the adjustment remote commander.
8) Select page: 0, address: 01, and set data: 00.

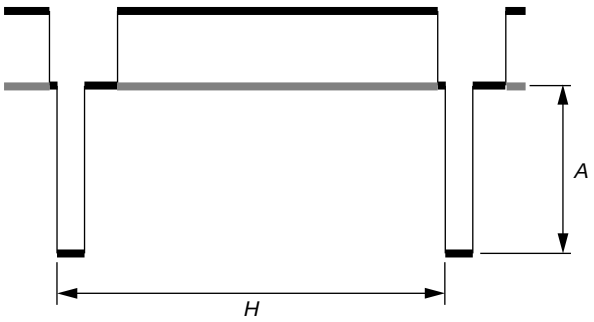

Fig. 5-3-8.

5. C OUT Level Adjustment (VC-214 board)

Set the chroma signal output level. (Adjust the D/A converter out put level of IC151.)

Mode	VTR stop
Signal	No signal
Measurement Point	Chroma signal terminal of S VIDEO terminal (75Ω terminated)
Measuring Instrument	Oscilloscope
Adjustment Page	F
Adjustment Address	6B
Specified Value	A=300 ± 5mV

Note : Insert the plug into the S video terminal.

Adjusting method:

1) Select page: 0, address: 01, and set data: 01.
2) Select page: 2, address: 01, set data: 41, and press the PAUSE button of the adjustment remote commander.
3) Select page: 6, address: 61, and set data: 30.
4) Select page: F, address: 6B, change the data and set the burst level (A) to the specified value.
5) Press the PAUSE button of the adjustment remote commander.
6) Select page: 6, address: 61, and set data: 10.
7) Select page: 2, address: 01, set data: 00, and press the PAUSE button of the adjustment remote commander.
8) Select page: 0, address: 01, and set data: 00.

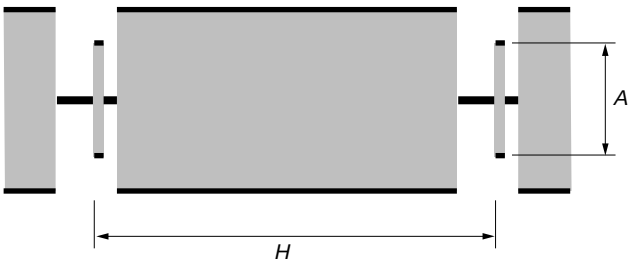

Fig. 5-3-9.

6. RP Filter f_0 Adjustment (VC-214 board)

Adjust the LPF of the playback RF amplifier (IC001).

Mode	VTR stop
Signal	No signal
Measurement Point	Pin ⑨ of CN910 (RF AGC OUT)
Measuring Instrument	Oscilloscope
Adjustment Page	F
Adjustment Address	6E
Specified Value	A= Minimum

Connection:

1) Input a 14.2MHz, 400mVp-p CW signal to Pin ⑦ of CN910 (RF AGC IN).

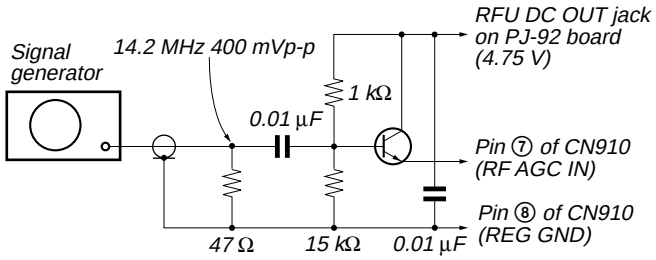

Transistor : General NPN transistor (2SC403, etc)
47 Ω resistor : 1-249-401-11
1 kΩ resistor : 1-249-417-11
15 kΩ resistor : 1-249-431-11
0.01 µF capacitor : 1-101-004-00

Fig. 5-3-10.

Adjusting method:

1) Select page: 0, address: 01, and set data: 01.
2) Select page: 2, address: 01, set data: 35, and press the PAUSE button of the adjustment remote commander.
3) Select page: F, address: 6E, change the data and minimize the 14.2 MHz signal level (A).
4) Press the PAUSE button of the adjustment remote commander.
5) Select page: 2, address: 01, set data: 00, and press the PAUSE button of the adjustment remote commander.
6) Select page: 0, address: 01, and set data: 00.

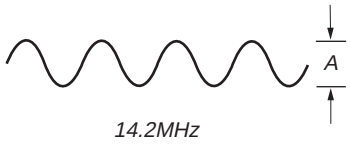

Fig. 5-3-11.

7. REC Y Current Adjustment (VC-214 board)

Adjust the Y FM signal recording current.

Mode	VTR recording (SP mode)
Signal	No signal
Measurement Point	Pin ⑩ of CN910 (REC RF)
Measuring Instrument	Oscilloscope (20 MHz BW LIMIT: OFF)
Adjustment Page	F
Adjustment Address	73 to 7A
Specified Value	A=185 ± 5mV

Preparations only for the model without REC switch:

1) Select page: 0, address: 01, and set data: 01.
2) Select page: D, address: 14, after memorizing the data, set the bit value of bit1 to "1". (Refer to "4-3, 3. Bit value discrimination" of "5-4. Service Mode").
3) Select page: D, address: 15, after memorizing the data, set the bit value of bit7 to "0".
4) Insert a tape, and set to recording mode. (Use the wireless remote commander of 8mm VCR.)

Adjusting method:

1) Insert a tape, and set to recording mode.
2) Select page: 0, address: 01, and set data: 01.
3) Select page: F, address: 7C, after note down the data , set data: 00, and press the PAUSE button of the adjustment remote commander.
4) Select page: F, address: 85, after note down the data , set data: 00, and press the PAUSE button of the adjustment remote commander.
5) Select page: 2, address: 01, set data: 41, and press the PAUSE button of the adjustment remote commander.
6) Select page: F, address: 74 , change the data and set the Y signal level (A) to the specified value.
7) Press the PAUSE button of the adjustment remote commander.
8) Select page: F, address: 74 , and read the data (D_{74}).
9) Calculate the adjustment data from the following equations, and input each adjustment address.
   Address: 73 $D_{73} = D_{74}$
   Address: 75 $D_{75} = D_{74}$
   Address: 76 $D_{76} = D_{74}$

   Note: After setting each data, be sure to press the PAUSE button of the adjustment remote commander.
10) Write the following data in page: F, address: 77 to 7A .

Address	Data
77	63
78	6B
79	63
7A	6B

   Note: After setting each data, be sure to press the PAUSE button of the adjustment remote commander.
11) Select page: F, address: 7C, set the data noted down at step 3), and press the PAUSE button of the adjustment remote commander.
12) Select page: F, address: 85, set the data noted down at step 4), and press the PAUSE button of the adjustment remote commander.
13) Select page: 2, address: 01, set data: 00, and press the PAUSE button of the adjustment remote commander.
14) Select page: 0, address: 01, and set data: 00.

Processing after completed adjustment only for the model without REC switch:

1) Select page: 0, address: 01, and set data: 01.
2) Select page: D, address: 14, and set the data memorized at step 2) of "Preparations only for the model without REC switch".
3) Press the PAUSE button of the adjustment remote commander.
4) Select page: D, address: 15, and set the data memorized at step 3) of "Preparations only for the model without REC switch".
5) Press the PAUSE button.
6) Select page: 0, address: 01, and set data: 00.

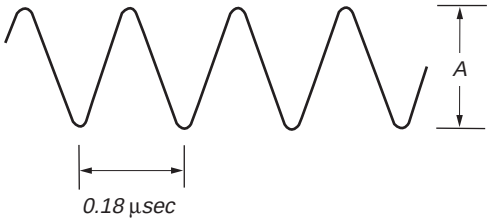

Fig. 5-3-12.

8. REC L Level Adjustment (VC-214 board)

Set the recording levels of the REC AFM signal and REC ATF signal. If the level is too low, the audio S/N will deteriorated, tracking will not be stable, or SP/LP will not be discriminated properly. If too high, color beets will be produced on the self-recording / playback image.

Mode	VTR recording (SP mode)
Signal	No signal
Measurement Point	Pin ⑩ of CN910 (REC RF)
Measuring Instrument	Oscilloscope (20 MHz BW LIMIT: OFF)
Adjustment Page	F
Adjustment Address	7B to 84
Specified Value	A=11.0 ± 0.7mV

Note: Do not insert any plug into the AUDIO (R) terminal.

Connection:

1) Remove C085 (0.01 µF, Pin ⑯ of IC202).
   Note: After completing "REC L Level Adjustment" and "REC C Current Adjustment", replace C085 with new parts (1-182-970-11 CERAMIC CHIP 0.01 µF 10% 25V).

Preparations only for the model without REC switch:

1) Select page: 0, address: 01, and set data: 01.
2) Select page: D, address: 14, after memorizing the data, set the bit value of bit1 to "1". (Refer to "4-3, 3. Bit value discrimination" of "5-4. Service Mode").
3) Select page: D, address: 15, after memorizing the data, set the bit value of bit7 to "0".
4) Insert a tape, and set to recording mode. (Use the wireless remote commander of 8mm VCR.)

Adjusting method:

1) Insert Hi8 ME tape, and set to recording mode.
2) Select page: 0, address: 01, and set data: 01.
3) Select page: F, address: 7B, set data: 00, and press the PAUSE button of the adjustment remote commander.
4) Select page: F, address: 85, set data: 00, and press the PAUSE button of the adjustment remote commander.
5) Select page: F, address: 7C, change the data and set the REC AFM signal level (A) to the specified value.
6) Press the PAUSE button of the adjustment remote commander.
7) Select page: F, address: 7C, read the data (D_{7C}).
8) Convert D_{7C} to decimal notation, and obtain D_{7C}'. (Refer to Table 5-4-1. "Hexadecimal-decimal conversion table" of "5-4. Service Mode".)
9) Calculate the adjustment data (decimal) from the following equations (decimal calculation), convert it to a hexadecimal number, and input each adjustment address.
   Address: 7B $D_{7B}' = D_{7C}'$
   Address: 7D $D_{7D}' = D_{7C}'$
   Address: 7E $D_{7E}' = D_{7C}'$
   Address: 7F $D_{7F}' = D_{7C}' - 68$
   Address: 80 $D_{80}' = D_{7C}' - 68$
   Address: 81 $D_{81}' = D_{7C}' - 68$
   Address: 82 $D_{82}' = D_{7C}' - 68$
   Note: After setting each data, be sure to press the PAUSE button of the adjustment remote commander.
10) Write the following data (hexadecimal) in page: F, address: 83 to 84.

Address	Data
83	96
84	96

   Note: After setting each data, be sure to press the PAUSE button of the adjustment remote commander.
11) Select page: 0, address: 01, and set data: 00.
12) Perform "REC C Current Adjustment".

Processing after completed adjustment only for the model without REC switch:

1) Select page: 0, address: 01, and set data: 01.
2) Select page: D, address: 14, and set the data memorized at step 2) of "Preparations only for the model without REC switch".
3) Press the PAUSE button of the adjustment remote commander.
4) Select page: D, address: 15, and set the data memorized at step 3) of "Preparations only for the model without REC switch".
5) Press the PAUSE button.
6) Select page: 0, address: 01, and set data: 00.

VC-214 BOARD

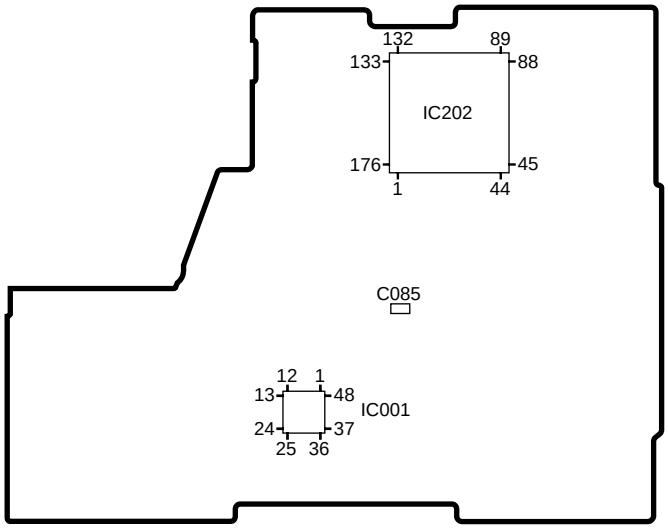

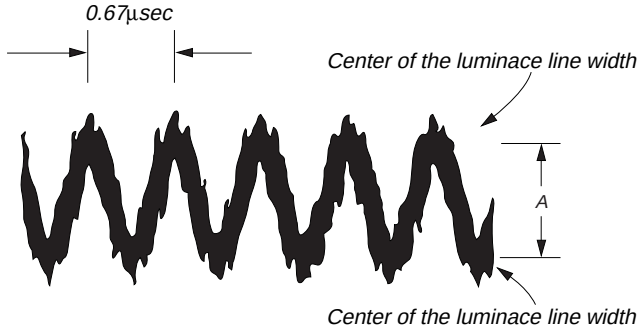

Fig. 5-3-13.

9. REC C Current Adjustment (VC-214 board)

Set the recording current levels of the REC Chroma signal. If it is too low, chroma signal noise in played back picture will increased. If too high, Y signal noises will increase and white modulation noises will be produced.

Mode	VTR recording (SP mode)
Signal	No signal
Measurement Point	Pin ⑩ of CN910 (REC RF)
Measuring Instrument	Oscilloscope
Adjustment Page	F
Adjustment Address	85
Specified Value	A=35.7 ± 1.3mV

Connection:

1) Remove C085 (0.01 µF, Pin ⑯ of IC202).
   Note: After completing "REC L Level Adjustment" and "REC C Current Adjustment", replace C085 with new parts (1-162-970-11 CERAMIC CHIP 0.01 µF 10% 25V).
2) Connect Pin ㊺ of IC001 and GND with a 0.01F capacitor. 0.01 µF capacitor: 1-101-004-00

Preparations only for the model without REC switch:

1) Select page: 0, address: 01, and set data: 01.
2) Select page: D, address: 14, after memorizing the data, set the bit value of bit1 to "1". (Refer to "4-3, 3. Bit value discrimination" of "5-4. Service Mode").
3) Select page: D, address: 15, after memorizing the data, set the bit value of bit7 to "0".
4) Insert a tape, and set to recording mode. (Use the wireless remote commander of 8mm VCR.)

Adjusting method:

1) Insert a tape, and set to recording mode.
2) Select page: 0, address: 01, and set data: 01.
3) Select page: 2, address: 01, set data: 41, and press the PAUSE button of the adjustment remote commander.
4) Select page: 6, address: 61, and set data: 30.
5) Select page: F, address: DE, after note down the data, set data: 00, and press the PAUSE button of the adjustment remote commander.
6) Select page: F, address: 85, change the data and set the REC chroma signal level (A) to the specified value.
7) Press the PAUSE button of the adjustment remote commander.
8) Select page: F, address: DE, set the data noted down at step 5), and press the PAUSE button of the adjustment remote commander.
9) Select page: 6, address: 61, and set data: 10.
10) Select page: 2, address: 01, set data: 00, and press the PAUSE button of the adjustment remote commander.
11) Select page: 0, address: 01, and set data: 00.

Processing after completed adjustment only for the model without REC switch:

1) Select page: 0, address: 01, and set data: 01.
2) Select page: D, address: 14, and set the data memorized at step 2) of "Preparations only for the model without REC switch".
3) Press the PAUSE button of the adjustment remote commander.
4) Select page: D, address: 15, and set the data memorized at step 3) of "Preparations only for the model without REC switch".
5) Press the PAUSE button.
6) Select page: 0, address: 01, and set data: 00.

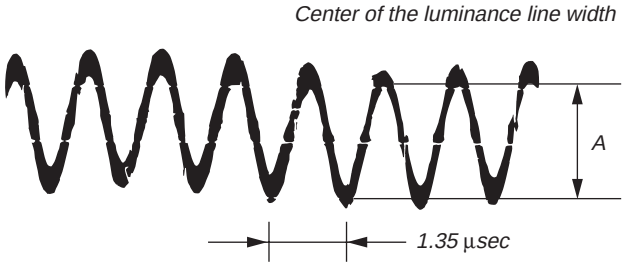

Fig. 5-3-14.

3-5. IR TRANSMITTER ADJUSTMENTS

Adjust using a IR receiver jig (J-6082-383-A).

Note : If the distance between the IR receiver jig and the camcorder is below 1m, cover the LASER LINK emitter with a ND filter. (For example, when the distance is 30cm to 50cm, cover the LASER LINK emitter with a ND filter 1.0.)

Switch setting:

LASER LINK ..... ON (Red LED is lit)

1. IR Video Carrier Frequency Adjustment (VC-214 board)

Mode	Camera standby
Subject	Arbitrary
Measurement Point	Pin ⑤ of CN003 of IR receiver jig (RF) (Or Pin ⑯ of IC751 of VC-214 board)
Measuring Instrument	Frequency counter
Adjustment Page	F
Adjustment Address	68
Specified Value	f = 11.85 ± 0.05 MHz

Connection of Equipment

Connect the measuring device as shown in the following figure, and adjust.

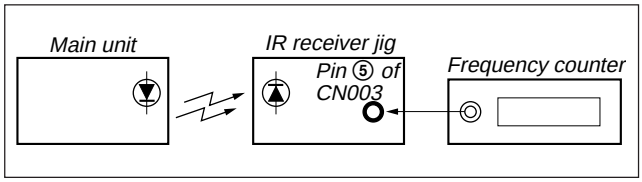

Fig. 5-3-15.

Adjusting method:

1) Select page: 0, address: 01, and set data: 01.
2) Select page: 2, address: 01, set data: 37, and press the PAUSE button of the adjustment remote commander.
3) Select page: F, address: 68, change the data, and set the video carrier frequency (f) to the specified value.
4) Press the PAUSE button of the adjustment remote commander.
5) Select page: 2, address: 01, set data: 00, and press the PAUSE button of the adjustment remote commander.
6) Select page: 0, address: 01, and set data: 00.

2. IR Video Deviation Adjustment (VC-214 board)

Mode	Camera standby
Subject	Arbitrary
Measurement Point	VIDEO OUT terminal of IR receiver jig (Terminated at 75Ω)
Measuring Instrument	Oscilloscope
Adjustment Page	F
Adjustment Address	66
Specified Value	A = 0.87 ± 0.04 V

Connection of Equipment

Connect the measuring device as shown in the following figure, and adjust.

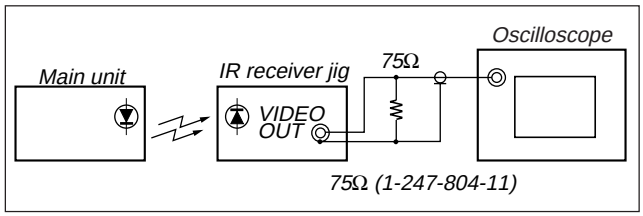

Fig. 5-3-16.

Adjusting method:

1) Select page: 0, address: 01, and set data: 01.
2) Select page: 2, address: 01, set data: 39, and press the PAUSE button of the adjustment remote commander.
3) Select page: F, address: 66, and change the data, set the video signal amplitude (A) to the specified value.
4) Press the PAUSE button of the adjustment remote commander.
5) Select page: 2, address: 01, set data: 00, and press the PAUSE button of the adjustment remote commander.
6) Select page: 0, address: 01, and set data: 00.

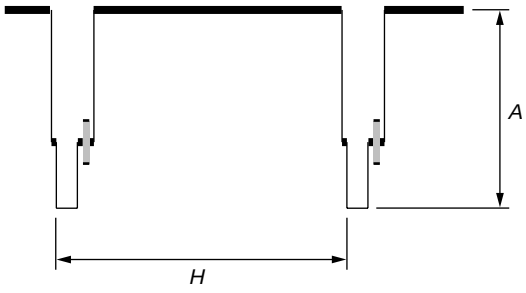

Fig. 5-3-17.

3. IR Audio Deviation Adjustment (VC-214 board)

Mode	VTR recording
Signal	Audio signal : 400Hz, –7.5dBs : L or R of AUDIO terminal Video signal : Color bar signal : VIDEO terminal
Measurement Point	AUDIO L terminal and AUDIO R terminal of IR receiver jig (Terminated at 47kΩ)
Measuring Instrument	Audio level meter
Adjustment Page	F
Adjustment Address	67
Specified Value	Signal level: –7.5 ± 2.0 dBs Level difference of L and R: Below 2dB

Connection of Equipment

Connect the measuring device as shown in the following figure, and adjust.

Preparations only for the model without REC switch:

1) Select page: 0, address: 01, and set data: 01.
2) Select page: D, address: 14, after memorizing the data, set the bit value of bit1 to "1". (Refer to "4-3, 3. Bit value discrimination" of "5-4. Service Mode").
3) Select page: D, address: 15, after memorizing the data, set the bit value of bit7 to "0".
4) Insert a tape, and set to recording mode. (Use the wireless remote commander of 8mm VCR.)

Adjusting method:

1) Select page: 0, address: 01, and set data: 01.
2) Connect the audio level meter to the AUDIO L terminal of the IR receiver jig.
3) Select page: F, address: 67, change the data and set the 400Hz audio signal level to the specified value.
4) Press the PAUSE button of the adjustment remote commander.
5) Connect the audio level meter to the AUDIO R terminal of the IR receiver jig.
6) Check that the 400Hz audio signal level is within the specified value. If outside, repeat from step 2).
7) Select page: 0, address: 01, and set data: 00.

Processing after completed adjustment only for the model without REC switch:

1) Select page: 0, address: 01, and set data: 01.
2) Select page: D, address: 14, and set the data memorized at step 2) of "Preparations only for the model without REC switch".
3) Press the PAUSE button of the adjustment remote commander.
4) Select page: D, address: 15, and set the data memorized at step 3) of "Preparations only for the model without REC switch".
5) Press the PAUSE button.
6) Select page: 0, address: 01, and set data: 00.

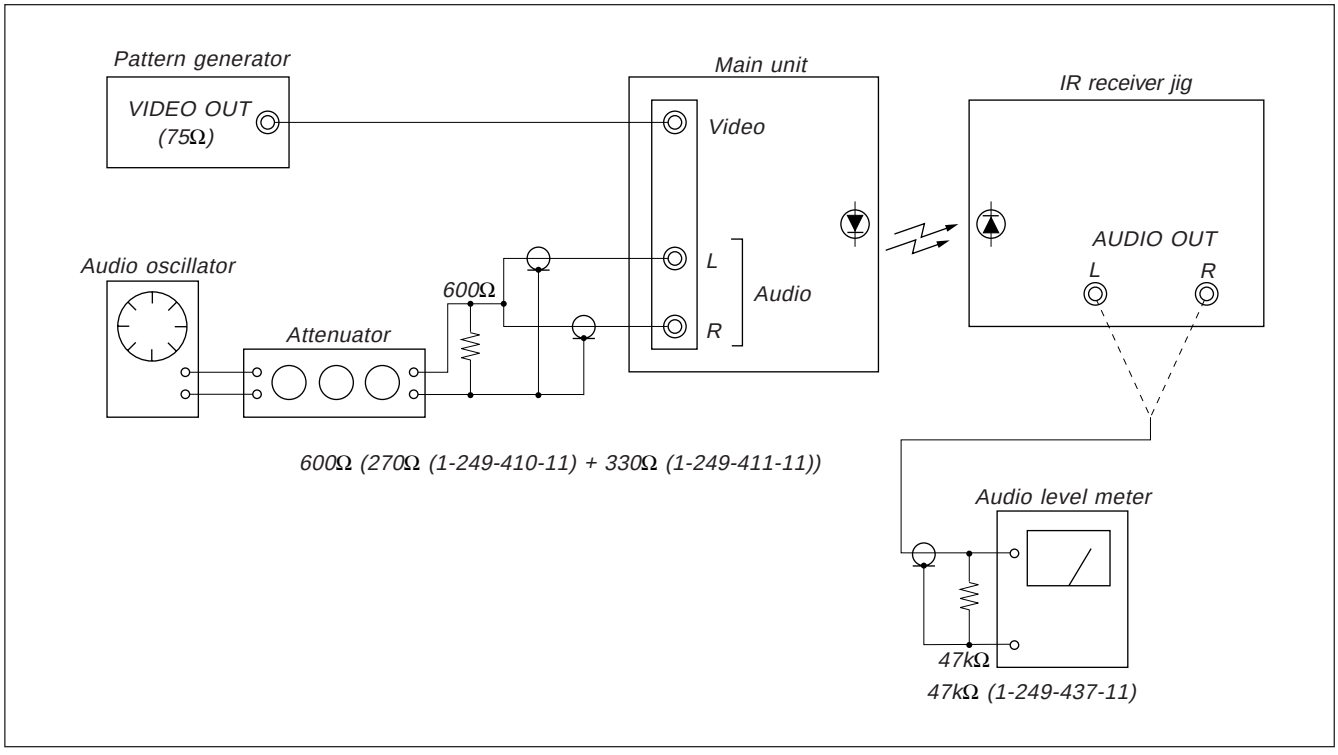

Fig. 5-3-18.

3-6. AUDIO SYSTEM ADJUSTMENT

- Perform the adjustment using color bar signal as a video signal input for the VIDEO terminal.
- The items to be adjusted for the R channel will be indicated within the [ ], in regard to the adjusting items to be adjusted for both L and R channels.
- Set the Hi-Fi sound switch in the menu display to “STEREO” position unless specified otherwise.

Note :

1) When inputting the audio signal, input same signal to both the L and R channels, unless otherwise.
2) Be sure insert the plug (Shorting plug or dummy plug, etc) into the AUDIO terminal (Right). If the plug is not inserted, the monaural mode will be set, and correct adjustments can not be carried out.
   [Monaural mode]
   During recording ..... REC AFM RF 1.7MHz carrier will not be output.
   During playback ..... The L + R signal will be output from the AUDIO terminal (Left).

[Connecting the measuring instruments for the audio]

Connect the audio system measuring instruments in addition to the video system measuring instruments as shown in Fig. 5-3-19, and perform adjustments at the power switch [PLAYER] position.

[Adjustment Procedure]

1) 1.5MHz deviation adjustment
2) 1.7MHz deviation adjustment
3) BPF f_0 adjustment

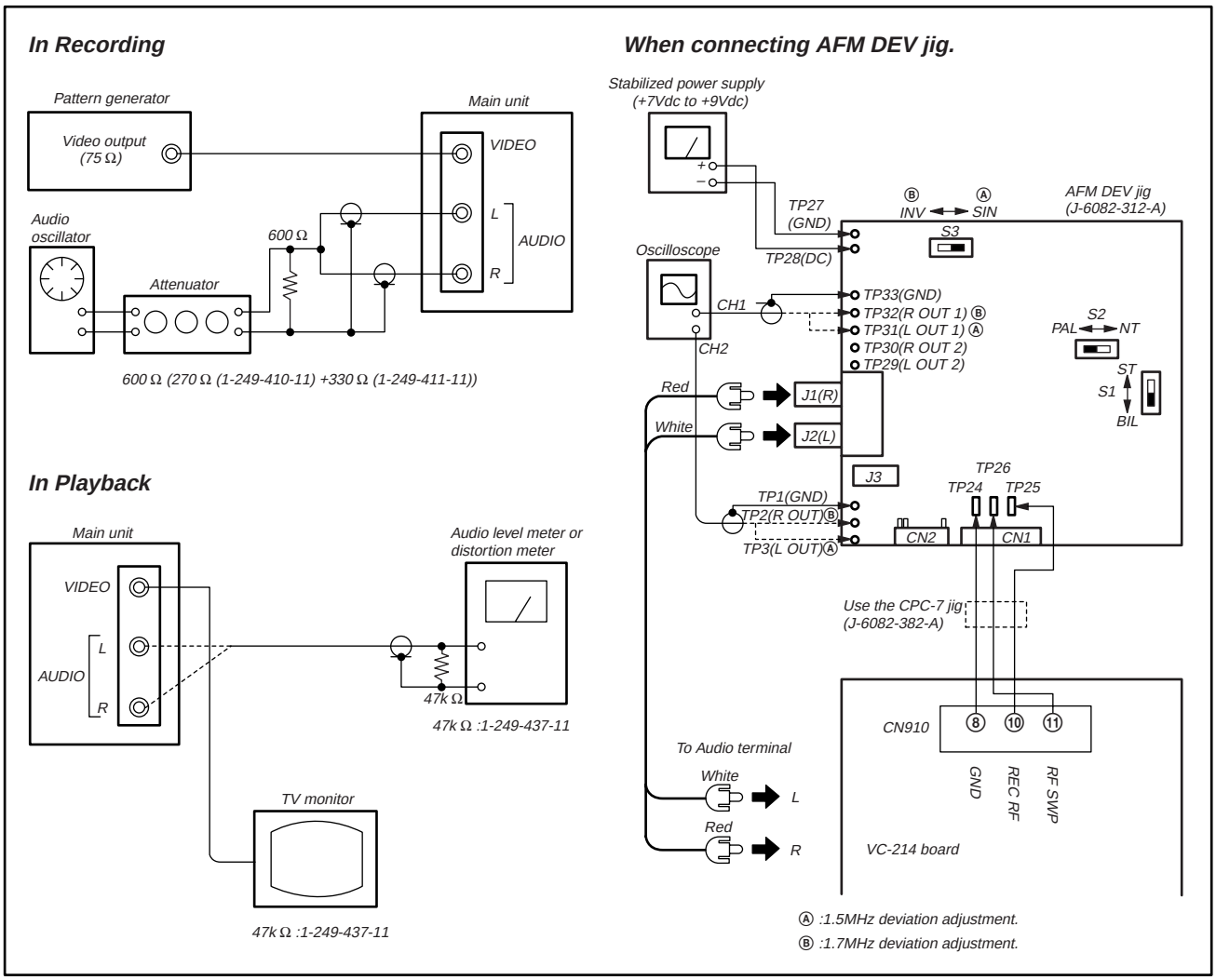

Fig. 5-3-19.

1. 1.5 MHz Deviation Adjustment (VC-214 board)

Sets the spectrum of the L-ch ((L+R)/2 signal) level modulated during recording. If deviated, the crosstalk signal of the audio signal will occur and the audio level will drop during both playback and recording.

Mode	VTR recording
Signal	Input the AFM DEV jig output signal to the left and right audio input terminal
Measurement Point	CH1: AFM DEV jig TP31 CH2: AFM DEV jig TP3
Measuring Instrument	Oscilloscope ADD mode CH2 INV mode
Adjustment Page	F
Adjustment Address	62
Specified Value	The level difference between CH1 signal and CH2 signal should be minimum.

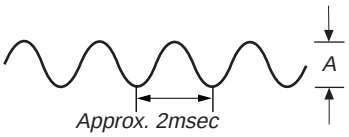

Fig. 5-3-20.

Connection:

1) Connect TP24 ,TP25 and TP26 of the AFM DEV jig to CN910 of the VC-214 board.
   TP24(GND) ..... Pin ⑧ of CN910
   TP25(REC RF) ..... Pin ⑩ of CN910
   TP26(RF SWP) ..... Pin ⑪ of CN910
2) Connect the audio output terminal (J1 and J2) of the AFM DEV jig to AUDIO terminal of the unit.
3) Connect TP28(DC), TP27(GND) of the AFM DEV jig to the DC power supply (+7Vdc to +9Vdc).
4) Set the AFM DEV jig switches to the following positions.
   S1 ..... BIL Position
   S2 ..... PAL Position
   S3 ..... SIN Position

Preparations only for the model without REC switch:

1) Select page: 0, address: 01, and set data: 01.
2) Select page: D, address: 14, after memorizing the data, set the bit value of bit1 to "1". (Refer to "4-3, 3. Bit value discrimination" of "5-4. Service Mode").
3) Select page: D, address: 15, after memorizing the data, set the bit value of bit7 to "0".
4) Set to recording mode. (Use the wireless remote commander of 8mm VCR.)

Adjusting method :

1) Match the vertical ranges of CH1 and CH2 of the oscilloscope to each other.
2) Set the oscilloscope to the ADD mode and CH2 to the INV (invert) mode.
3) Select page: 0, address: 01, and set data: 01.
4) Select page: F, address: 62, change the data and minimize the audio signal level difference (A).
5) Press the PAUSE button of the adjustment remote commander.
6) Select page: 0, address: 01, and set data: 00.

Processing after completed adjustment only for the model without REC switch:

1) Select page: 0, address: 01, and set data: 01.
2) Select page: D, address: 14, and set the data memorized at step 2) of "Preparations only for the model without REC switch".
3) Press the PAUSE button of the adjustment remote commander.
4) Select page: D, address: 15, and set the data memorized at step 3) of "Preparations only for the model without REC switch".
5) Press the PAUSE button.
6) Select page: 0, address: 01, and set data: 00.

2. 1.7 MHz Deviation Adjustment (VC-214 board)

Sets the spectrum of the R-ch ((L-R)/2 signal) level modulated during recording. If deviated, the crosstalk signal of the audio signal will occur and the audio level will drop during both playback and recording.

Mode	VTR recording
Signal	Input the AFM DEV jig output signal to the left and right audio input terminal
Measurement Point	CH1: AFM DEV jig TP32 CH2: AFM DEV jig TP2
Measuring Instrument	Oscilloscope ADD mode CH2 normal mode
Adjustment Page	F
Adjustment Address	63
Specified Value	The level difference between CH1 signal and CH2 signal should be minimum.

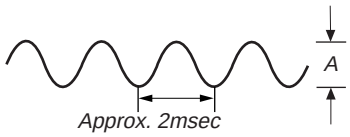

Fig. 5-3-21.

Connection:

1) Connect TP24 ,TP25 and TP26 of the AFM DEV jig to CN910 of the VC-214 board.
   TP24(GND) ..... Pin ⑧ of CN910
   TP25(REC RF) ..... Pin ⑩ of CN910
   TP26(RF SWP) ..... Pin ⑪ of CN910
2) Connect the audio output terminal (J1 and J2) of the AFM DEV jig to AUDIO terminal of the unit.
3) Connect TP28(DC), TP27(GND) of the AFM DEV jig to the DC power supply (+7Vdc to +9Vdc).
4) Set the AFM DEV jig switches to the following positions.
   S1 ..... BIL Position
   S2 ..... PAL Position
   S3 ..... INV Position

Preparations only for the model without REC switch:

1) Select page: 0, address: 01, and set data: 01.
2) Select page: D, address: 14, after memorizing the data, set the bit value of bit1 to "1". (Refer to "4-3, 3. Bit value discrimination" of "5-4. Service Mode").
3) Select page: D, address: 15, after memorizing the data, set the bit value of bit7 to "0".
4) Set to recording mode. (Use the wireless remote commander of 8mm VCR.)

Adjusting method :

1) Match the vertical ranges of CH1 and CH2 of the oscilloscope to each other.
2) Set the oscilloscope to the ADD mode and CH2 to the normal mode.
3) Select page: 0, address: 01, and set data: 01.
4) Select page: F, address: 63, change the data and minimize the audio signal level difference (A).
5) Press the PAUSE button of the adjustment remote commander.
6) Select page: 0, address: 01, and set data: 00.

Processing after completed adjustment only for the model without REC switch:

1) Select page: 0, address: 01, and set data: 01.
2) Select page: D, address: 14, and set the data memorized at step 2) of "Preparations only for the model without REC switch".
3) Press the PAUSE button of the adjustment remote commander.
4) Select page: D, address: 15, and set the data memorized at step 3) of "Preparations only for the model without REC switch".
5) Press the PAUSE button.
6) Select page: 0, address: 01, and set data: 00.

3. BPF f_0 Adjustment (VC-214 board)

Sets the BPF passing frequency so that the AFM signal can separate from the playback RF signal properly. If deviated. the mono/stereo mode will be differentiated incorrectly, and noises and distortions will increase during high volume playback.

Mode	Playback
Signal	Alignment tape: For BPF adjustment (WR5-11CS)
Measurement Point	Audio output terminal left or right
Measuring Instrument	distortion meter
Adjustment Page	F
Adjustment Address	64
Specified Value	The Main and Sub channel distortion rate should be almost the same (within ± 1%) and minimum.

Adjusting method :

1) Select page: 0, address: 01, and set data: 01.
2) Set the Hi-Fi sound switch (menu display) to “2”.
3) Select page: F, address: 64, change the data and minimize the distortion rate.
4) Press the PAUSE button of the adjustment remote commander.
5) Set the Hi-Fi sound switch (menu display) to “1”.
6) Select page: F, address: 64, change the data and minimize the distortion rate.
7) Press the PAUSE button of the adjustment remote commander.
8) Repeat steps 2) to 7) and set the data of address: 64 so that the distortions rates when the Hi-Fi sound switch is set to “2” and set to “1” respectively are almost the same and minimum.
9) Press the PAUSE button of the adjustment remote commander.
10) Select page: 0, address: 01, and set data: 00.
11) Set the Hi-Fi sound switch to “STEREO”.

5-4. SERVICE MODE

4-1. ADJUSTMENT REMOTE COMMANDER

The adjustment remote commander is used for changing the calculation coefficient in signal processing, EVR data, etc. The adjustment remote commander performs bi-directional communication with the unit using the remote commander signal line (LANC). The resultant data of this bi-directional communication is written in the non-volatile memory.

1. Using the Adjustment Remote Commander

1) Connect the adjustment remote commander to the LANC terminal.
2) Set the HOLD switch of the adjustment remote commander to "HOLD" (SERVICE position). If it has been properly connected, the LCD on the adjustment remote commander will display as shown in Fig. 5-4-1.

Fig. 5-4-1.

3) Operate the adjustment remote commander as follows.
   - Changing the page
     The page increases when the EDIT SEARCH+ button is pressed, and decreases when the EDIT SEARCH– button is pressed. There are altogether 16 pages, from 0 to F.

Hexadecimal notation	0	1	2	3	4	5	6	7	8	9	A	B	C	D	E	F
LCD Display	0	1	2	3	4	5	6	7	8	9	A	b	c	d	E	F
Decimal notation conversion value	0	1	2	3	4	5	6	7	8	9	10	11	12	13	14	15

   - Changing the address
     The address increases when the FF (►►) button is pressed, and decreases when the REW (◄◄) button is pressed. There are altogether 256 addresses, from 00 to FF.
   - Changing the data (Data setting)
     The data increases when the PLAY (►) button is pressed, and decreases when the STOP (■) button is pressed. There are altogether 256 data, from 00 to FF.
   - Writing the adjustment data
     The PAUSE button must be pressed to write the adjustment data (D, E, F page) in the nonvolatile memory. (The new adjusting data will not be recorded in the nonvolatile memory if this step is not performed.)
4) After completing all adjustments, turn off the main power supply (8.4 V) once.

2. Precautions Upon Using the Adjustment Remote Commander

Mishandling of the adjustment remote commander may erase the correct adjustment data at times. To prevent this, it is recommended that all adjustment data be noted down before beginning adjustments and new adjustment data after each adjustment.

4-2. DATA PROCESS

The calculation of the DDS display and the adjustment remote commander display data (hexadecimal notation) are required for obtaining the adjustment data of some adjustment items. In this case, after converting the hexadecimal notation to decimal notation, calculate and convert the result to hexadecimal notation, and use it as the adjustment data. Indicates the hexadecimal-decimal conversion table.

Hexadecimal-decimal Conversion Table

	Lower digit of hexadecimal / Upper digit of hexadecimal	0	1	2	3	4	5	6	7	8	9	A (A)	B (b)	C (C)	D (d)	E (E)	F (F)
	0	0	1	2	3	4	5	6	7	8	9	10	11	12	13	14	15
	1	16	17	18	19	20	21	22	23	24	25	26	27	28	29	30	31
	2	32	33	34	35	36	37	38	39	40	41	42	43	44	45	46	47
	3	48	49	50	51	52	53	54	55	56	57	58	59	60	61	62	63
	4	64	65	66	67	68	69	70	71	72	73	74	77	76	77	78	79
	5	80	81	82	83	84	85	86	87	88	89	90	91	92	93	94	95
	6	96	97	98	99	100	101	102	103	104	105	106	107	108	109	110	111
	7	112	113	114	115	116	117	118	119	120	121	122	123	124	125	126	127
	8	128	129	130	131	132	133	134	135	136	137	138	139	140	141	142	143
	9	144	145	146	147	148	149	150	151	152	153	154	155	156	157	158	159
	A (A)	160	161	162	163	164	165	166	167	168	169	170	171	172	173	174	175
①	B (b)	176	177	178	179	180	181	182	183	184	185	186	187	188	189	190	191
	C (C)	192	193	194	195	196	197	198	199	200	201	202	203	204	205	206	207
	D (d)	208	209	210	211	212	213	214	215	216	217	218	219	220	221	222	223
	E (E)	224	225	226	227	228	229	230	231	232	233	234	235	236	237	238	239
	F (F)	240	241	242	243	244	245	246	247	248	249	250	251	252	253	254	255

② (above the D column)

Note: The characters shown in the parenthesis ( ) shown the display on the adjustment remote commander.

(Example) If the DDS display or the adjustment remote commander shows BD (bd);
Because the upper digit of the adjustment number is B (b), and the lower digit is D (d), the meeting point "189" of ① and ② in the above table is the corresponding decimal number.

Table. 5-4-1.

4-3. SERVICE MODE

Note: After the completion of the all adjustments, cancel the service mode by either of the following ways.

1) Unplug the main power supply and remove the lithium battery. (In this case, date and time and menu setting have been set by users are canceled. Perform resetting.)
2) After data on page: D and F is restored, return data of the address: 01 on page: 0 to 00. And when data on page: 2 is changed, return the data to the original condition.

1. Test Mode Setting

Set/release each test mode. Set page: 0, address: 01, data: 01 before setting the data of page D and F.

Page F	Address 2C

Data	Function
00	Normal
01	Test mode Various emergency prohibitions and releases Drum emergency, capstan emergency, loading motor emergency, reel emergency, tape top and end, DEW detection

Page D	Address 10

Data	Function
00	Normal
01	Camera power ON
02	VTR power ON
03	Camera + VTR power ON

* For page D and F, the data set will be recorded in the nonvolatile memory by pressing the PAUSE button on the adjustment remote commander. Take note that, in this case, the test mode will not be released even if the main power has been turned off.

* Be sure to return this address data to 00 after completing adjustments/repairs and press the PAUSE button of the adjustment remote commander. And set page: 0, address: 01, data: 00.

2. Emergency Memory Address

Page F	Address 10 to 1B

Address	Contents
10	1st EMG code
12	Upper: MSW code when the mechanism starts shifting the 1st time Lower: MSW code when the 1st emergency occurs
13	Lower: Target MSW code of the 1st emergency occurs
14	2nd EMG code
16	Upper: MSW code when the mechanism starts shifting the 2nd time Lower: MSW code when the 2nd emergency occurs
17	Lower: Target MSW code of the 2nd emergency occurs
18	Last EMG code
1A	Upper: MSW code when the mechanism starts shifting the last time Lower: MSW code when the last emergency occurs
1B	Lower: Target MSW code of the last emergency occurs

When there are no emergency, data 00 will be written in the above addresses (10 to 1B). When the first emergency occurs, the data corresponding to the emergency will be written in the address (10 to 13) for this first emergency. In the same way, when the second emergency occurs, the data corresponding to the emergency will be written in the address (14 to 17) for this second emergency.
The data corresponding to the emergency occurring the last will be written in the address (18 to 1B) for this last emergency.
Therefore the data of addresses 18 to 1B are renewed each time an emergency occurs.

Note 1: Be sure to rewrite the data of addresses 10 to 1B to 00 after repairs/adjustments.
Note 2: When rewriting the data, be sure to press the PAUSE button of the remote commander after setting the data.

2-1. EMG Code (Emergency Code)

The codes shown in the following table which correspond to errors that occur are recorded in addresses 10, 14, and 18.

Code	Type of Emergency
00	No error
10	Loading motor time-out during load
11	Loading motor time-out during unload
20	T reel emergency (reel slack) during unloading
21	S reel emergency (reel slack) during unloading
22	T reel emergency
23	S reel emergency
30	FG emergency at the start up of the capstan
31	FG emergency during the normal rotation of the capstan
40	FG emergency at the start up of the drum
41	PG emergency at the start up of the drum
42	FG emergency during the normal rotation of the drum
43	PG emergency during the normal rotation of the drum
44	Phase emergency during the normal rotation of the drum

2-2. MSW Codes

- The lower parts of the data of addresses 12, 16 and 1A represent the MSW codes (mode switch, mechanism position) when errors occurs.
- The upper parts of the data of addresses 12, 16 and 1A represent, when the mechanism position is to be moved, the MSW codes at the start of movement (when moving the loading motor).
- The lower parts of the data of addresses 13, 17 and 1B represent the MSW codes of the desired movement when the mechanism position is to be moved.

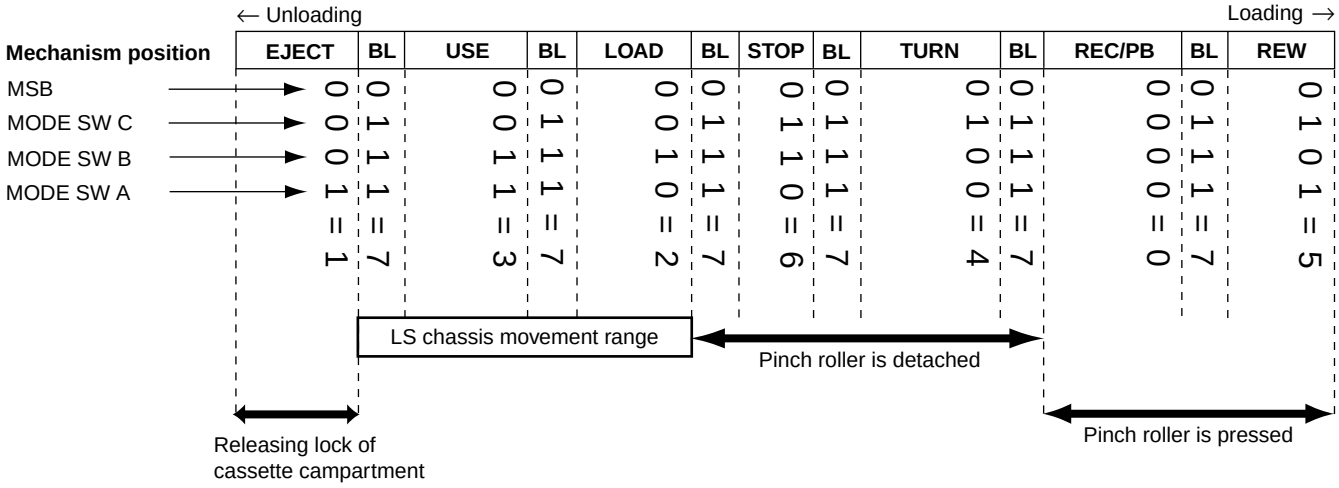

Mechanism Position	MSW Code	Contents
EJECT	1	Position at which the cassette compartment lock is released. The mechanism will not move any further in the unloading direction.
BL	7	BLANC code. Between two codes. The mechanism will not be stopped by this code while it is operating.
USE	3	EJECT completion position. When the cassette is ejected, the mechanism will stop at this position.
LOAD	2	Code during loading/unloading. Code that is used while the LS chassis is moving.
STOP	6	Normal stop position. The pinch roller separates, the tension regulator returns, and the brakes of both reels turn on.
TURN	4	Position at which is used when the pendulum gear swings from S to T or from T to S.
REC/PB	0	PB, REC, CUE, REV, PAUSE, FF positions. The pinch roller is pressed and tension regulator is on.
REW	5	REW position. REW are carried at this position. The mechanism will not move any further in the loading direction.

3. Bit Value Discrimination

Bit values must be discriminated using the display data of the adjustment remote commander for the following items. Us the table below to discriminate if the bit value is “1” or “0”.

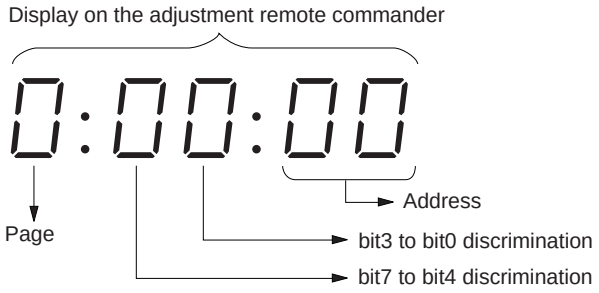

(Example) If the remote commander display is “8E”, bit value from bit 7 to bit 4 can be discriminated from the column Ⓐ, and those from bit 3 to bit 0 from column Ⓑ.

	Display on the adjustment remote commander	Bit values			
		bit3 or bit7	bit2 or bit6	bit1 or bit5	bit0 or bit4
	0	0	0	0	0
	1	0	0	0	1
	2	0	0	1	0
	3	0	0	1	1
	4	0	1	0	0
	5	0	1	0	1
	6	0	1	1	0
	7	0	1	1	1
Ⓐ	8	1	0	0	0
	9	1	0	0	1
	A (A)	1	0	1	0
	B (b)	1	0	1	1
	C (C)	1	1	0	0
	D (d)	1	1	0	1
Ⓑ	E (E)	1	1	1	0
	F (F)	1	1	1	1

4. Input/output Selection Check

Page 2	Address 49

Bit	Function	When bit value = 1	When bit value = 0
0			
1			
2			
3			
4	MIC jack	MIC jack is used	
5	AUDIO terminal	Monaural	Stereo
6	VIDEO terminal	VIDEO terminal is used	
7	S VIDEO terminal		S VIDEO terminal is used

Using method:

1) Select page: 2, address: 49.
2) By discriminating the bit value of display data, the state of the input/output selection can be discriminated.

5. LED, LCD (Display window) Check

Page 2	Address 05	Bit5

Using method:

1) Select page: 2, address: 05, and set the bit value of Bit5 to “1”.
2) Check that all LED are lit and all segments of LCD (display window) are lit.
3) Select page: 2, address: 05, and set the bit value of Bit5 to “0”.

6. Record of Use Check

Page 2	Address A2 to AA

Bit	Function		Remarks
A2	Drum rotation	Hour (H)	1000th place digit and 100th place digit of counted time (decimal digit)
A3	counted time	Hour (L)	10th place digit and 1st place digit of counted time (decimal digit)
A4	(BCD code)	Minute	
A5	User initial power	Year	After setting the clock, set the date of power on next
A6	on date	Month	
A7	(BCD code)	Day	
A8	Final condensation	Year	
A9	occurrence date	Month	
AA	(BCD code)	Day	

Using method:

1) The record of use data is displayed at page: 2, addresses: A2 to AA.
   Note: This data will be erased when the coin lithium battery (CF-56 board BH001) is removed (reset).

7. Switch Check (1)

Page 2	Address 43

Bit	Function	When bit value = 1	When bit value = 0
0	VTR MODE SW (MA-353 board S302)	OFF	ON
1	CAM MODE SW (MA-353 board S303)	OFF	ON
2	START/STOP SW (SS-8500 block S002)	OFF	ON
3	EJECT SW (SS-8500 block S003)	OFF	ON
4	CC DOWN SW (Mechanism chassis)	OFF (UP)	ON (DOWN)
5	PHOTO FREEEZE SW (FP-49 flexible)	OFF	ON
6			
7			

Using method:

1) Select page: 2, address: 43.
2) By discriminating the bit value of display data, the state of the switches can be discriminated.

8. Switch Check (2)

Page 2	Address 60 to 66

Using method:

1) Select page: 2, address: 60 to 66.
2) By discriminating the display data, the pressed key can be discriminated.

Address	Data							
	00 to 0B	0C to 23	24 to 3E	3F to 5C	5D to 80	81 to AA	AB to DE	DF to FF
60 (KEY AD0) (IC604 ⑨③)	LASER LINK (FK-8500 block) (S008)	STOP (FK-8500 block) (S001)	FF (FK-8500 block) (S003)	REC (FK-8500 block) (S005, 007)	EDIT SEARCH (+) (FK8500 S009)	EDIT SEARCH (–) (FK8500 S010)		No key input
61 (KEY AD1) (IC604 ⑨④)	PHOTO REC (FP-49 flexible)	PAUSE (FK-8500 block) (S002)	REW (FK-8500 block) (S004)	PLAY (FK-8500 block) (S006)				No key input
62 (KEY AD2) (IC604 ⑨⑤)	DIGITAL EFFECT (CF-58 board) (S001)	PICTURE EFFECT (CF-58 board) (S006)	MENU (CF-58 board) (S010)	EXECUTE (CF-58 board) (S015)	TIME (CF-58 S021)	5sec REC (CF-58 board) (S024)	PUSHING REC (CF-58 board) (S024)	NORMAL REC (CF-58 board) (S024)
64 (KEY AD4) (IC604 ⑨⑦)			EXPOSURE (CF-58 S012)	BACK LIGHT (CF-58 S017)	FADER (CF-58 board) (S027)	FOCUS INFINITY (MR-8500 block) (S001)	FOCUS AUTO (MR-8500 block) (S001)	FOCUS MANUAL (MR-8500 block) (S001)
65 (KEY AD5) (IC604 ⑨⑧)	DATE (CF-58 board) (S003)	COUNTER RESET (CF-58 board) (S008)	END SEARCH (CF-58 board) (S013)	TITLE (CF-58 board) (S018)			+ SLOW SHUTTER (FP-62 flexible)	No key input
66 (KEY AD6) (IC604 ⑨⑨)	PROGRAM AE (CF-58 board) (S004)							No key input

9. Headphone Jack Check

Page 2	Address 45

Bit	Function	When bit value = 1	When bit value = 0
1	Headphone jack	Headphone jack is used	

Using method:

1) Select page: 2, address: 45.
2) By discriminating the bit value of display data, the state of the headphone jack can be discriminated.

SECTION 6
REPAIR PARTS LIST

6-1. EXPLODED VIEWS

NOTE:

- -XX, -X mean standardized parts, so they may have some differences from the original one.
- Items marked "*" are not stocked since they are seldom required for routine service. Some delay should be anticipated when ordering these items.
- The mechanical parts with no reference number in the exploded views are not supplied.
- Abbreviation
  NE : North European Model
  EE : East European Model
  RU : Russian Model

The components identified by mark ⚠ or dotted line with mark ⚠ are critical for safety. Replace only with part number specified.

6-1-1. FRONT PANEL (D) BLOCK AND BATTERY PANEL (P) BLOCK ASSEMBLY

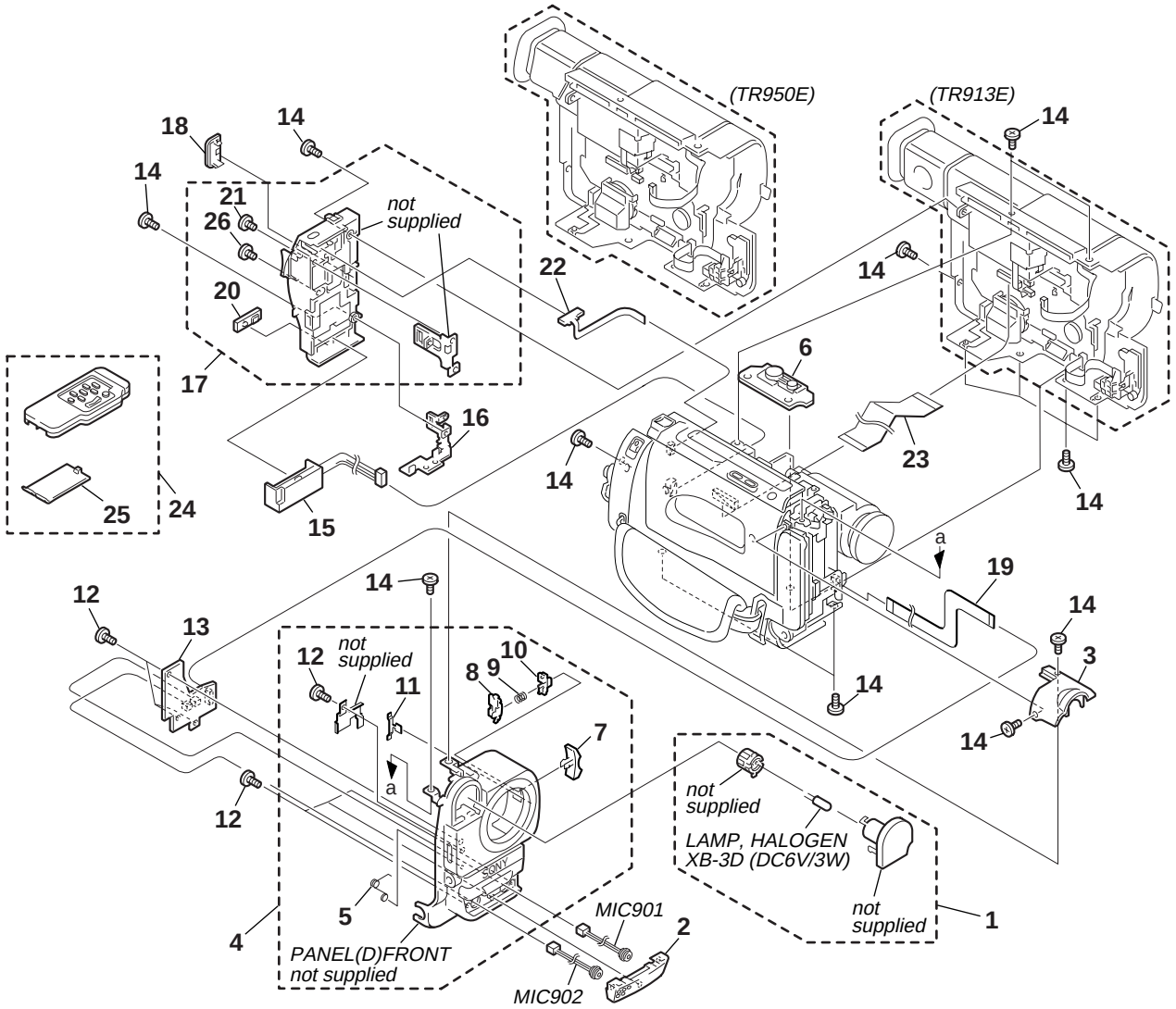

Ref. No.	Part No.	Description	Remarks
1	1-517-857-11	LIGHT, VIDEO	
2	X-3949-326-1	GRILLE (D) ASSY, MICROPHONE	
3	3-053-603-01	CABINET (L), SHOE	
4	X-3949-323-1	PANEL (D) ASSY, FRONT	
5	3-987-882-01	SPRING, TORSION	
6	3-987-717-01	SCREW	
7	3-987-631-01	KNOB, P	
8	3-053-596-01	HOLDER (D), P KNOB	
9	3-973-619-01	SPRING, COMPRESSION	
10	3-053-597-01	BUTTON (D), LOCK	
11	3-987-642-01	SPRING, CLICK	
12	3-948-339-01	SCREW, TAPPING	
13	A-7073-877-A	MA-353 (IB) BOARD, COMPLETE	
14	3-968-729-01	SCREW (M2), LOCK ACE, P2	

Ref. No.	Part No.	Description	Remarks
15	1-694-384-11	TERMINAL BOARD, BATTERY	
16	3-053-723-01	SHEET METAL (LOWER), STRAP	
17	X-3949-336-1	PANEL ASSY (P), BATTERY	
18	3-975-752-01	LID (BT), CPC	
19	1-672-670-11	FP-43 FLEXIBLE BOARD	
20	3-987-656-01	LID, JACK	
21	3-968-729-61	SCREW (M2X3), LOCK ACE, P2	
22	1-672-663-21	FP-49 FLEXIBLE BOARD	
23	1-783-240-11	CABLE, FLEXIBLE FLAT (FFC-236)	
24	1-467-574-21	REMOTE COMMANDER (RMT-708)	
25	3-958-131-01	LID, BATTERY CASE (for RMT-708)	
26	3-962-826-01	SCREW (M2X4)	
MIC901	1-542-312-11	MICROPHONE (L)	
MIC902	1-542-312-11	MICROPHONE (R)	

6-1-2. CABINET (R) BLOCK ASSEMBLY

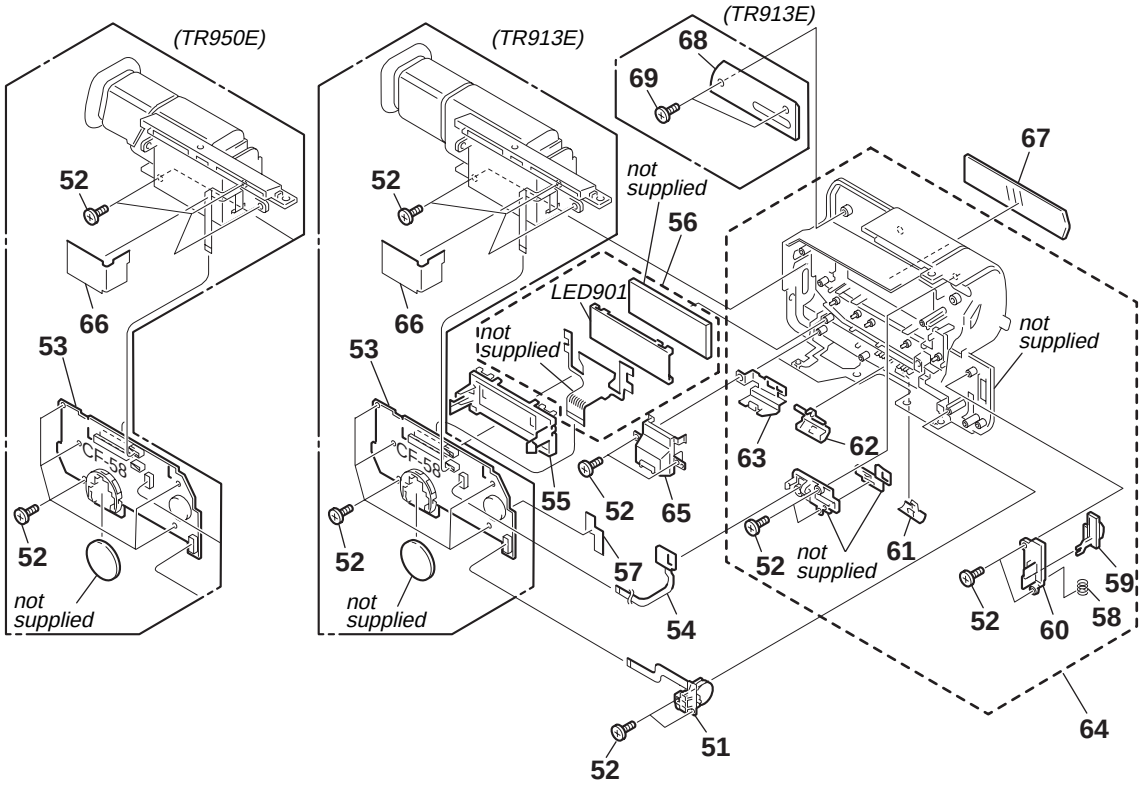

Ref. No.	Part No.	Description	Remarks
51	1-475-621-11	SWITCH BLOCK, CONTROL(MR-8500)	
52	3-948-339-61	TAPPING	
53	A-7073-878-A	CF-58 (C) BOARD, COMPLETE (TR950E)	
53	A-7073-907-A	CF-58 BOARD, COMPLETE (TR913E)	
54	1-672-668-21	FP-62 FLEXIBLE BOARD	
55	3-053-718-01	HOLDER (92), LCD	
56	A-7094-150-A	INDICATION LCD BLOCK ASSY	
* 57	3-054-613-01	SHEET, MUFFLE	
58	3-568-315-01	SPRING, COMPRESSION	
59	3-053-689-01	KNOB (93), MF	
60	3-053-690-01	RETAINER (93), MF	
61	3-053-714-01	KNOB, MODE SELECTION	
62	3-053-715-01	RETAINER, MODE SELECTION	

Ref. No.	Part No.	Description	Remarks
63	3-053-713-01	LID (92), LITHIUM BATTERY	
64	X-3949-426-1	CABINET (R (92)) ASSY	(TR913E:AEP2,UK/TR950E:AEP)
64	X-3949-427-1	CABINET (R (92)) ASSY	(TR913E:AEP1,EE,NE,RUS/TR950E:EE,NE,RUS)
65	3-053-717-01	RETAINER (92), LITHIUM BATTERY	
66	3-053-683-01	GUIDE, HARNESS	
67	3-053-719-01	WINDOW (92), LCD (TR950E)	
67	3-053-719-11	WINDOW (92), LCD (TR913E)	
68	3-053-684-01	GUIDE (B) (93), TILT (TR913E)	
69	3-948-339-01	SCREW, TAPPING	
⚠ LED901	1-517-858-11	LIGHT, BACK	

Note : The components identified by mark ⚠ or dotted line with mark ⚠ are critical for safety.
Replace only with part number specified.

6-1-3. CABINET (L) BLOCK AND MAIN BOARDS ASSEMBLY

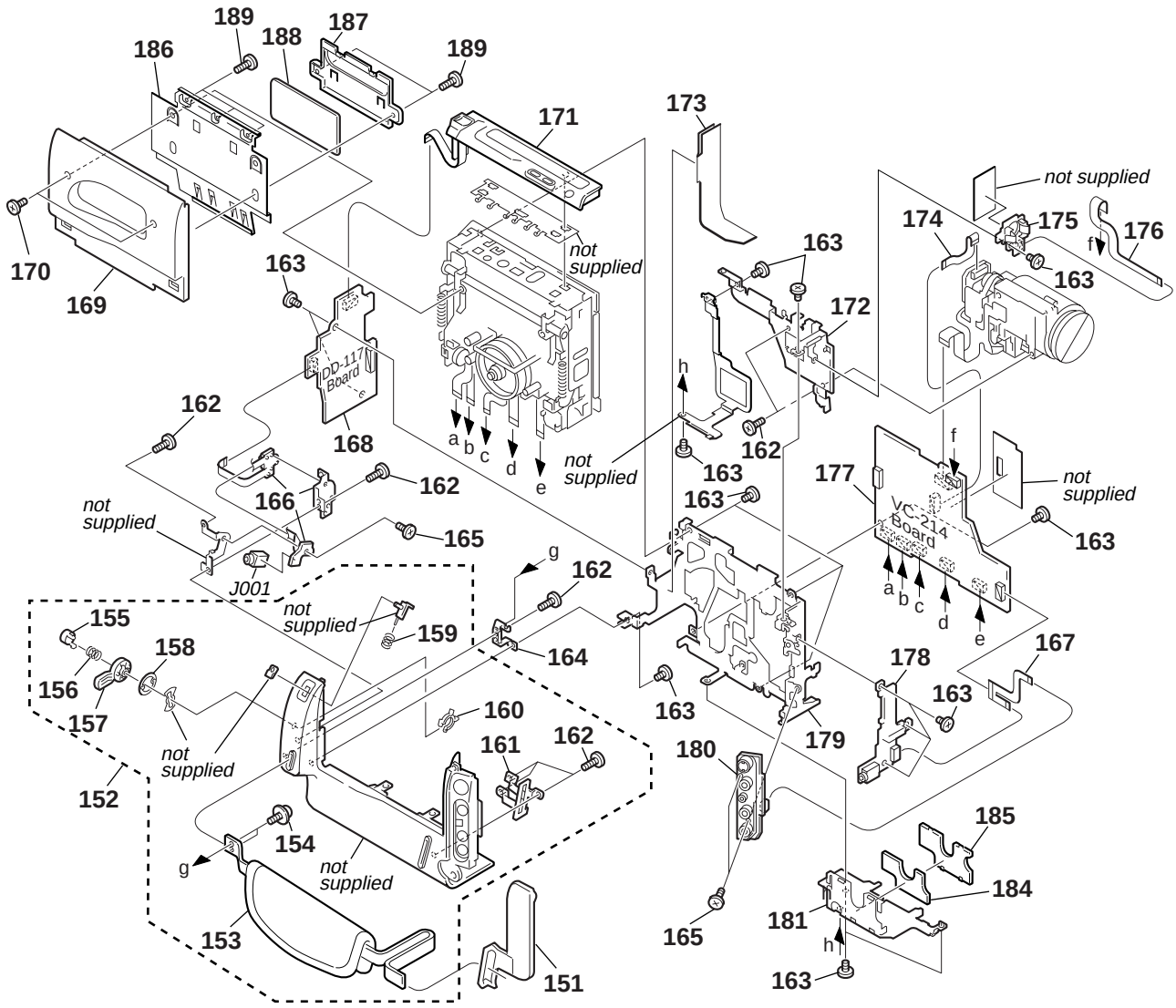

Ref. No.	Part No.	Description	Remarks
* 151	3-975-522-11	COVER, JACK	
152	X-3948-315-1	CABINET (L) ASSY	
153	3-052-815-01	BELT (ES), GRIP	
154	3-679-362-11	SCREW	
155	3-960-566-01	BUTTON, S/S	
156	3-302-492-00	SPRING, COMPRESSION	
157	3-969-081-01	KNOB, STAND-BY	
158	3-970-854-01	SPRING, STAND-BY	
159	3-979-642-01	SPRING, COMPRESSION	
160	3-949-192-01	HOLDER, STAND-BY KNOB	
161	3-975-966-01	SHEET METAL (2), SS	
162	3-948-339-61	TAPPING	
163	3-713-786-21	SCREW (M2X3)	
* 164	3-975-532-01	HOLDER, EL	
165	3-968-729-81	SCREW (M2), LOCK ACE, P2	
166	1-475-619-11	SWITCH BLOCK, CONTROL (SS-8500)	
167	1-672-671-11	FP-44 FLEXIBLE BOARD	
168	A-7073-879-A	DD-117 (CIB) BOARD, COMPLETE (TR950E)	
168	A-7073-908-A	DD-117 (I) BOARD, COMPLETE (TR913E)	
169	X-3949-338-1	LID ASSY, CASSETTE	

Ref. No.	Part No.	Description	Remarks
170	3-968-729-81	SCREW (M2), LOCK ACE, P2	
171	1-475-618-81	SWITCH BLOCK, CONTROL (FK-8500)	
* 172	3-053-742-01	FRAME (L), LENS	
* 173	3-053-745-01	PROTECTOR, LS FLEXIBLE	
174	1-672-665-11	FP-54 FLEXIBLE BOARD	
175	A-7073-882-A	VL-25 BOARD, COMPLETE	
176	1-672-673-11	FP-46 FLEXIBLE BOARD	
177	A-7094-197-A	VC-214 (CIBE) BOARD, COMPLETE (TR950E)	
177	A-7094-200-A	VC-214 (IBE) BOARD, COMPLETE (TR913E)	
178	A-7073-880-A	SE-85 (EM) BOARD, COMPLETE	
179	3-053-743-01	FRAME (A), MD	
180	A-7073-881-A	PJ-94 (E) BOARD, COMPLETE	
181	3-987-675-11	FRAME (B), MD	
184	1-469-363-11	FILTER, EMI (MD)	
185	3-987-676-01	COVER (MD), FERRITE	
186	3-987-678-11	PLATE, CASSETTE SHIELD	
187	3-987-677-01	COVER (C), FERRITE	
188	1-469-364-11	FILTER, EMI (CS)	
189	3-713-791-01	SCREW (M1.7X4), TAPPING, P2	
J001	1-565-276-31	JACK, ULTRA SMALL 1P	

6-1-4. EVF BLOCK ASSEMBLY

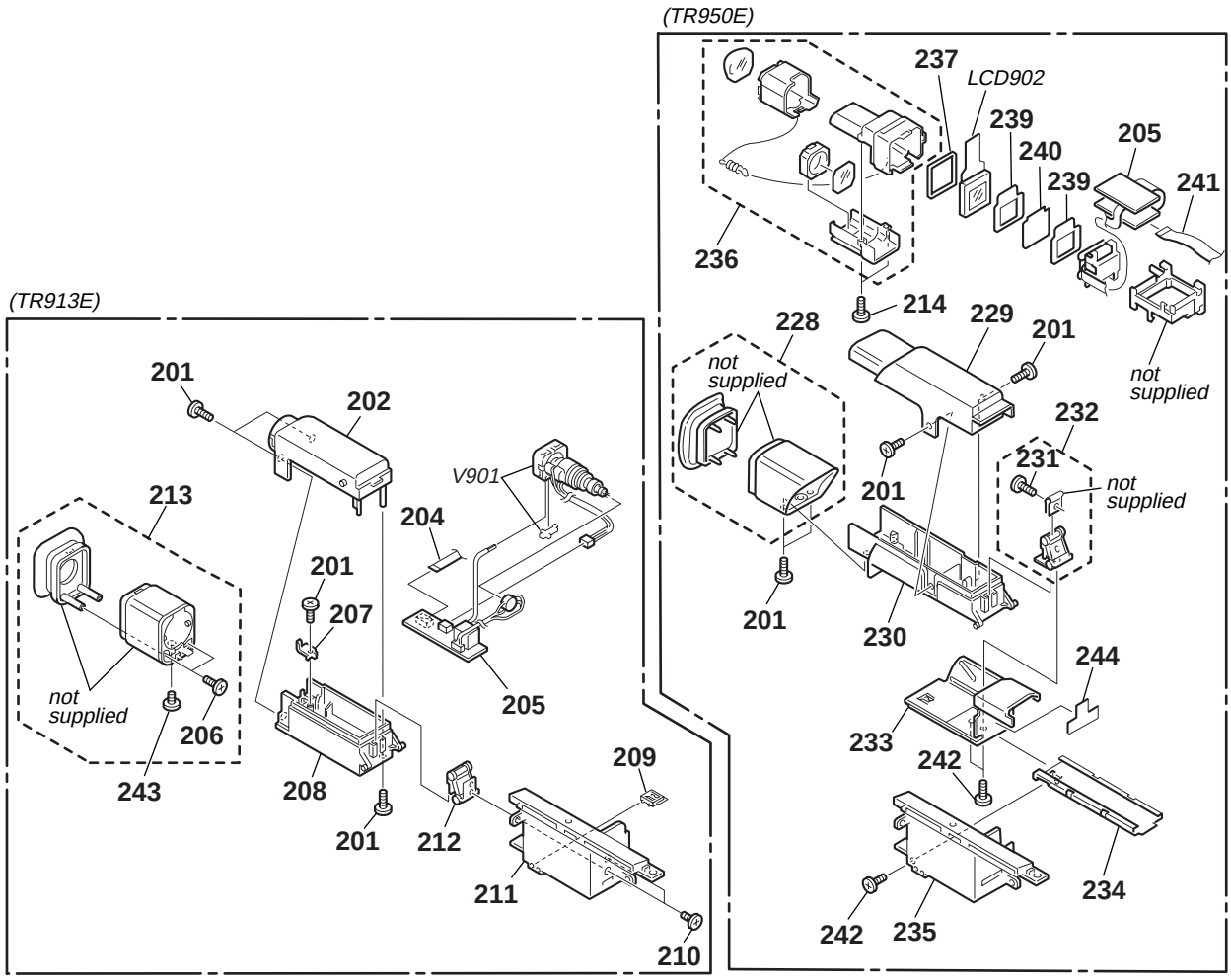

Ref. No.	Part No.	Description	Remarks
201	3-948-339-01	SCREW, TAPPING	
202	X-3949-328-2	CABINET (UPPER B) (93) ASSY (TR913E)	
204	1-790-412-11	CABLE, FLEXIBLE FLAT (FFC-256) (TR913E)	
205	A-7073-855-A	VF-129 (SSGE-P) BOARD, COMPLETE (TR913E)	
205	A-7073-876-A	VF-126 BOARD, COMPLETE (TR950E)	
206	3-948-339-61	TAPPING	
207	3-053-681-01	TALLY, EVF (TR913E)	
208	3-053-679-02	CABINET (LOWER B) (93), EVF (TR913E)	
209	3-053-685-01	LOCK (93), TILT (TR913E)	
210	3-713-786-21	SCREW (M2X3)	
211	3-053-682-02	BASE (B) (93), VF (TR913E)	
212	X-3949-327-1	ARM (B) ASSY, CRANK (TR913E)	
213	X-3949-329-1	FINDER (S) ASSY (TR913E)	
214	3-318-203-11	SCREW (B1.7X6), TAPPING	
228	X-3949-333-1	CABINET (REAR C) (92) ASSY,EVF (TR950E)	
229	3-053-671-01	CABINET (UPPER C) (92), EVF (TR950E)	

Ref. No.	Part No.	Description	Remarks
230	3-053-672-01	CABINET (LOWER C) (92), EVF (TR950E)	
231	3-704-197-12	SCREW (M1.4X2.0), LOCKING	
232	X-3949-331-1	ARM (C) ASSY, CRANK (TR950E)	
233	X-3949-400-1	BASE (C) (92) ASSY, SLIDE (TR950E)	
234	3-053-677-01	BASE (C), SLIDE FIXED (TR950E)	
235	3-053-675-01	BASE (C) (92), VF (TR950E)	
236	X-3949-332-1	LENS ASSY (92), VF (TR950E)	
* 237	3-960-302-11	CUSHION (1), LCD (TR950E)	
* 239	3-989-416-11	CUSHION (458), LCD (TR950E)	
* 240	3-988-563-01	ILLUMINATOR (458), BL (TR950E)	
241	1-672-662-11	FP-47 FLEXIBLE BOARD (TR950E)	
242	3-968-729-81	SCREW (M2), LOCK ACE, P2	
243	3-975-898-01	SCREW (T), F LOCK	
244	3-054-141-01	RETAINER, HARNESS (TR950E)	
LCD902	8-753-023-89	LCX024AK-J (TR950E)	
⚠V901	1-452-673-61	CRT ASSY (M01KXX90WB) (TR913E)	

Note : The components identified by mark ⚠ or dotted line with mark ⚠ are critical for safety. Replace only with part number specified.

6-1-5. ZOOM LENS (LSV-630A)

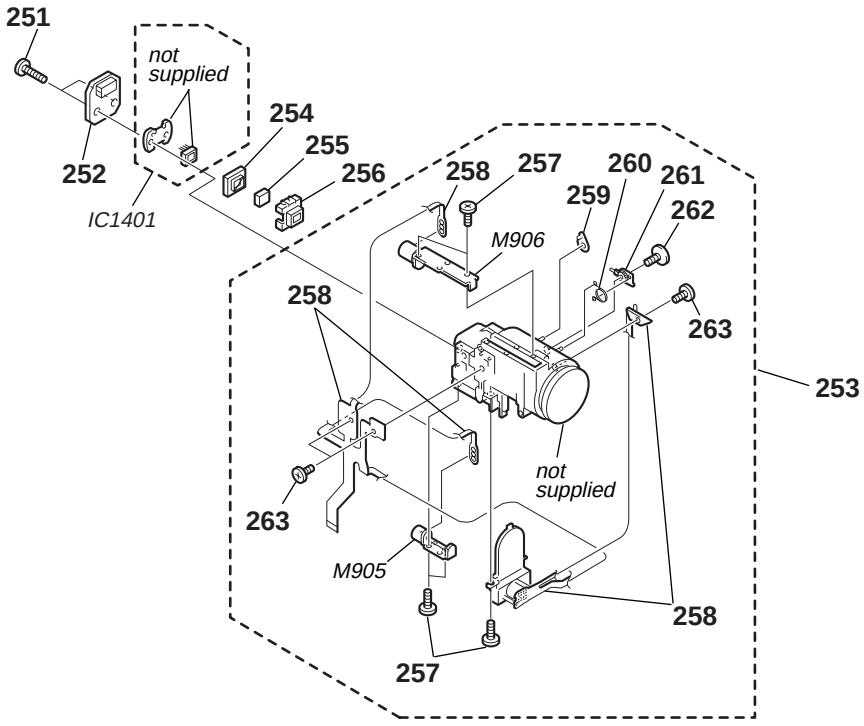

Be sure to read “Precautions upon replacing CCD imager” on page 4-9 when changing the CCD imager.

Ref. No.	Part No.	Description	Remarks
251	3-318-203-11	SCREW, TAPPING (B1.7X6)	
252	A-7073-834-A	CD-209 BOARD, COMPLETE	
253	8-848-729-01	DEVICE, LENS LSV-630A	
254	3-968-054-11	RUBBER (FM), SHIELD	
255	1-758-084-21	FILTER BLOCK, OPTICAL	
256	3-978-981-11	ADAPTOR (FK), CCD FITTING	
257	3-713-791-41	SCREW, TAPPING (M1.7X4)	
258	X-3949-355-2	IRIS FLEXIBLE ASSY 630(N)	
259	3-053-799-01	GEAR, IR	
260	3-053-800-01	SPRING, RETAIN	
261	3-653-827-01	LEVER, IR	
262	2-623-756-01	SCREW, TAPPING (M1.7X3)	
263	3-713-791-51	SCREW (M1.7X3.5), TAPPING, P2	
IC1401	A-7030-981-A	CCD BLOCK ASSY (CCD IMAGER)	
M905	1-763-262-11	MOTOR, FOCUS STEPPING	
M906	1-763-046-21	MOTOR, ZOOM STEPPING	

6-1-6. CASSETTE COMPARTMENT ASSEMBLY

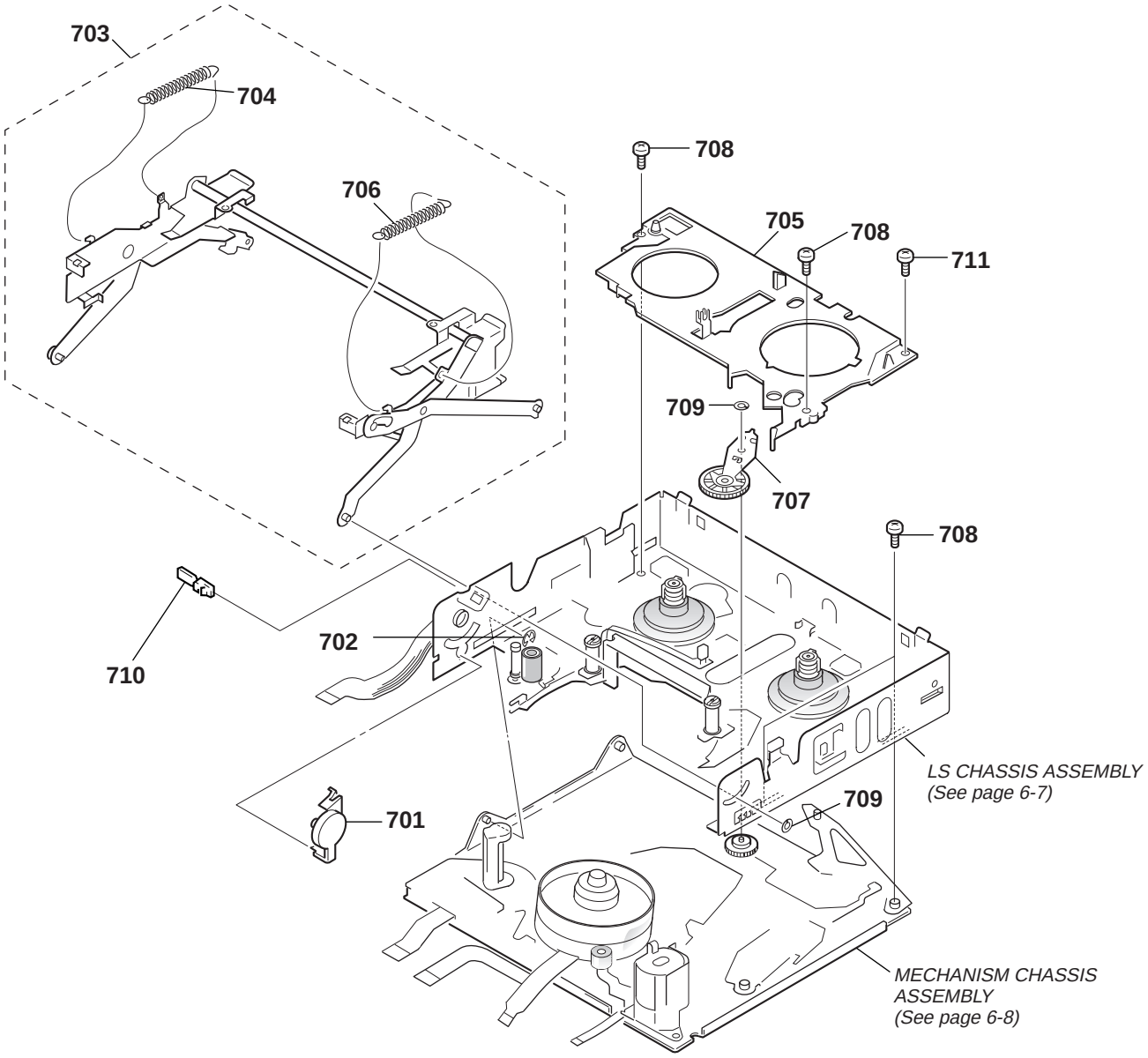

Ref. No.	Part No.	Description	Remarks
701	A-7040-421-A	DAMPER ASSY	
702	7-624-102-04	STOP RING 1.5, TYPE -E	
703	X-3949-153-2	CASSETTE COMPARTMENT ASSY	
704	3-965-587-03	SPRING(POWER TENSION),TENSION	
705	3-989-479-01	RETAINER (2), GOOSENECK	
706	3-973-268-01	SPRING(POWER TENSION),TENSION	

Ref. No.	Part No.	Description	Remarks
707	X-3949-383-1	GEAR ASSY (E), GOOSENECK	
708	3-947-503-01	SCREW (M1.4X2.5)	
709	3-727-176-01	WASHER, STOPPER	
710	3-971-076-01	FASTENER, D	
711	3-976-055-01	SCREW (M1.4X1)	

6-1-7. LS CHASSIS ASSEMBLY

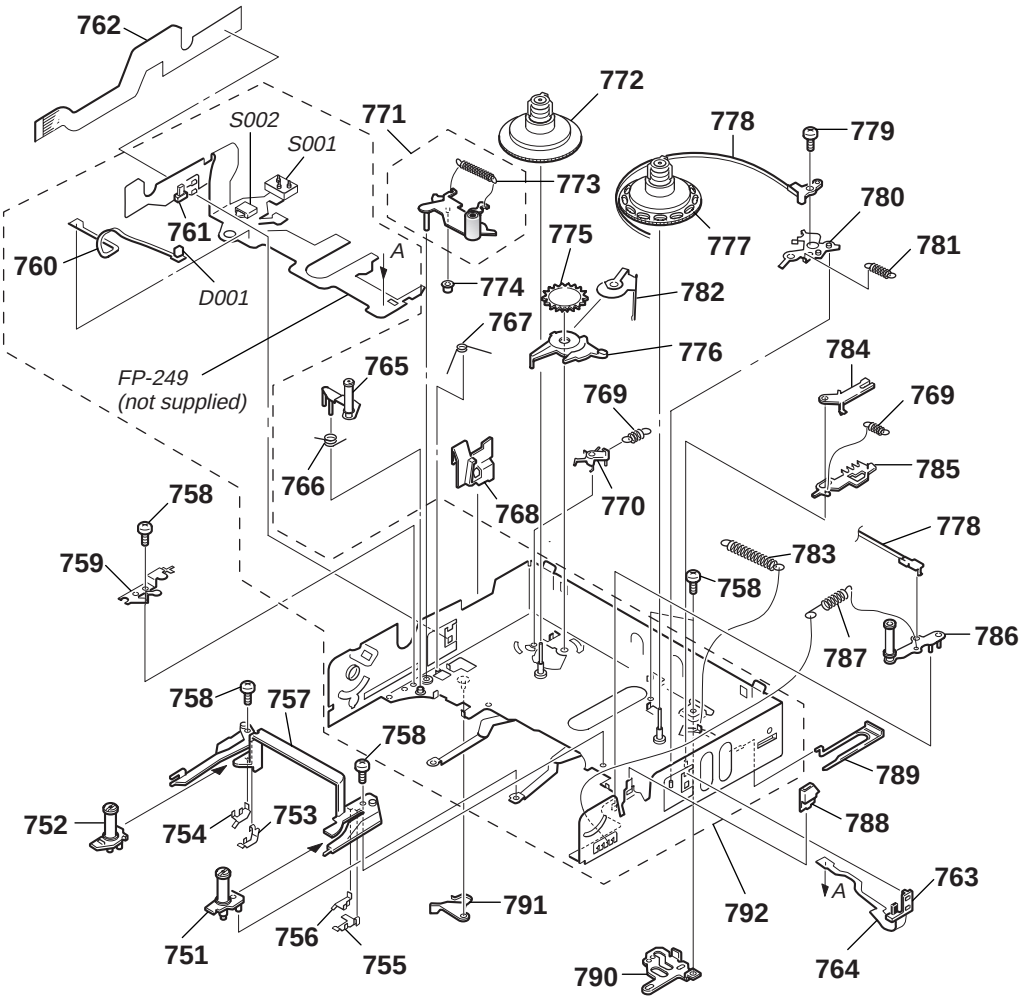

Ref. No.	Part No.	Description	Remarks
751	A-7040-419-A	BASE (S) BLOCK ASSY, GUIDE	
752	A-7040-418-B	BASE (T) BLOCK ASSY, GUIDE	
753	3-965-559-01	STOPPER (T)	
754	3-965-557-01	STOPPER (T), GB	
755	3-965-558-01	STOPPER (S)	
756	3-965-556-01	STOPPER (S), GB	
757	3-965-553-01	RAIL, GUIDE	
758	3-947-503-01	SCREW (M1.4X2.5)	
759	3-965-573-01	RETAINER, TG4	
760	1-658-213-11	FP-355 FLEXIBLE BOARD	
761	3-965-552-01	HOLDER, SENSOR (T)	
762	1-657-786-13	FP-221 FLEXIBLE BOARD	
763	3-965-551-01	HOLDER, SENSOR (S)	
764	1-658-214-11	FP-356 FLEXIBLE BOARD	
765	A-7040-417-A	ARM BLOCK ASSY, TG4	
766	3-965-574-01	SPRING (RETURN, TG4), TORSION	
767	3-965-575-01	SPRING (PINCH), TORSION	
768	3-965-568-11	GUIDE, LOCK	
769	3-965-562-01	SPRING (RATCHET), TENSION	
770	3-965-581-03	RATCHET, T	
771	X-3949-380-1	ARM ASSY (E), PINCH	
772	X-3945-398-2	DECK ASSY, REEL, T	
773	3-965-648-01	SPRING (PINCH), TENSION	

Ref. No.	Part No.	Description	Remarks
774	3-965-579-01	ROLLER, PINCH PRESS	
775	3-965-563-01	GEAR, T SOFT	
776	3-965-565-01	CLAW, T SOFT	
777	X-3945-397-1	DECK ASSY, REEL, S	
778	X-3945-396-1	BAND ASSY, TENSION REGULATOR	
779	3-945-756-01	SCREW (M1.4X3)	
780	3-965-583-01	ARM, RVS	
781	3-965-580-01	SPRING (ARM, RVS), TENSION	
782	3-966-384-01	SPRING, T SOFT	
783	3-965-578-01	SPRING, TENSION COIL	
784	3-965-560-01	RATCHET, S	
785	3-965-561-01	PLATE, RELEASE, S RATCHET	
786	X-3945-395-1	ARM ASSY, TG1	
787	3-965-576-01	SPRING (TG1), TENSION	
788	3-965-567-01	LID OPEN	
789	3-965-566-01	COVER, LS GUIDE	
* 790	3-965-577-01	PLATE, CAM, LS	
791	3-965-569-01	ARM, EJ	
792	A-7040-427-A	CHASSIS (S1) ASSY, LS	
D001	8-719-988-42	DIODE GL453	
S001	1-682-614-11	SWITCH, PUSH (3KEY) (Hi8 MP,ME/MP,REC PROOF)	
S002	1-572-688-11	SWITCH, PUSH (1 KEY) (C.C.LOCK)	

6-1-8. MECHANISM CHASSIS ASSEMBLY

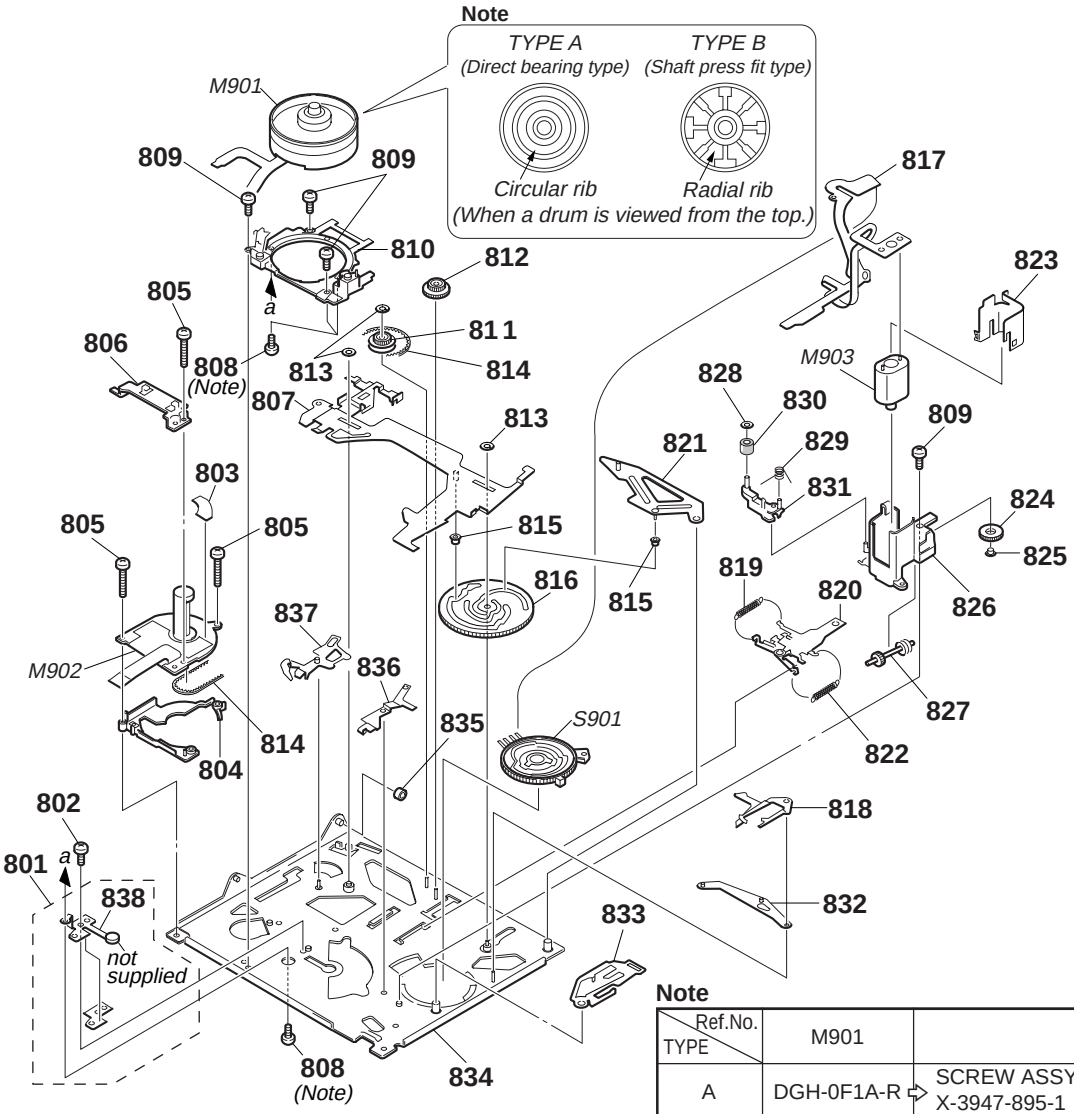

Note

TYPE \ Ref.No.	M901	808
A	DGH-0F1A-R ⇨	SCREW ASSY, DRUM ATTACHED X-3947-895-1
B	DGH-0E9A-R ⇨	SCREW (M1.4) 3-971-939-01

Be sure to refer to “How to identify drum and note” on page 2-10.

Ref. No.	Part No.	Description	Remarks
801	X-3947-343-1	GROUND (IM) ASSY, SHAFT	
802	3-965-550-02	SCREW (M1.7X1.6)	
803	1-672-542-11	FP-38 FLEXIBLE BOARD	
804	3-053-986-01	SPACER (E), CAPSTAN	
805	3-965-549-11	SCREW (M1.4X 6.7)	
806	3-053-988-01	HOLDER (E), FLEXIBLE	
807	3-971-644-01	SLIDER (2), M	
808	3-971-939-01	SCREW (M1.4)(for DRUM TYPE B)	
808	X-3947-895-1	SCREW ASSY, DRUM ATTACHED (for DRUM TYPE A)	
809	3-947-503-01	SCREW (M1.4X2.5)	
810	A-7040-494-A	BASE BLOCK ASSY, DRUM	
811	3-965-527-01	GEAR, CHANGE	
812	3-965-544-01	GEAR, RELAY	
813	3-331-007-21	WASHER	
814	3-965-546-01	BELT, TIMING	
815	3-965-533-01	ROLLER, LS	
816	3-965-528-01	GEAR, CAM	
817	1-657-784-11	FP-220 FLEXIBLE BOARD	
818	3-965-529-01	PLATE, REGULATOR, TENSION	
819	3-965-536-01	SPRING (LIMITTER ARM T), COILO	
820	X-3945-388-1	SLIDER ASSY, GL	

Ref. No.	Part No.	Description	Remarks
821	3-965-532-21	ARM, LS	
822	3-965-535-01	SPRING (LIMITTER ARM S), COIL	
823	3-965-542-01	SHIELD, MOTOR	
824	3-965-539-01	GEAR (A)	
825	3-965-538-01	SLEEVE, MOTOR HOLDER	
826	3-965-540-01	HOLDER, MOTOR	
827	3-965-541-01	SHAFT, WORM	
828	3-321-393-01	WASHER, STOPPER	
829	3-965-724-01	SPRING (RETURN, HC), TORSION	
830	A-7040-423-A	ROLLER BLOCK ASSY, HC	
831	X-3945-407-1	ARM ASSY, HC ROLLER	
832	3-965-531-01	ARM, GL	
833	3-965-530-01	PLATE (2), REGULATOR, TENSION	
834	X-3949-382-1	CHASSIS ASSY (E), MECHANICAL	
835	3-965-526-02	ROLLER, LS GUIDE	
836	3-965-547-01	ARM, HC DRIVING	
837	3-965-534-01	PLATE, PRESS, PINCH	
838	3-974-320-02	GROUND (IM), SHAFT	
M901	A-7048-899-A	DRUM BLOCK ASSY (DGH-0F1A-R)(PAL)	
M902	8-835-635-01	MOTOR, DC SCE12A/C-NP (CAPSTAN)	
M903	X-3945-401-1	MOTOR ASSY, DC (LOADING)	
S901	1-762-436-15	SWITCH, ROTARY (ENCODER)	

6-2. ELECTRICAL PARTS LIST

NOTE:

- Due to standardization, replacements in the parts list may be different from the parts specified in the diagrams or the components used on the set.
- -XX, -X mean standardized parts, so they may have some difference from the original one.
- Items marked "*" are not stocked since they are seldom required for routine service. Some delay should be anticipated when ordering these items.
- CAPACITORS:
  uF: µF
- RESISTORS
  All resistors are in ohms.
  METAL: metal-film resistor
  METAL OXIDE: Metal Oxide-film resistor
  F: nonflammable
- COILS
  uH: µH
- SEMICONDUCTORS
  In each case, u: µ, for example:
  uA...: µA... , uPA... , µPA... ,
  uPB... , µPB... , uPC... , µPC... ,
  uPD..., µPD...

When indicating parts by reference number, please include the board name.

The components identified by mark ⚠ or dotted line with mark ⚠ are critical for safety. Replace only with part number specified.

- Abbreviation
  NE : North European Model
  EE : East European Model
  RU : Russian Model

Ref. No.	Part No.	Description			Remarks
	A-7073-834-A	CD-209 BOARD, COMPLETE			
		**********			
		(Ref.No.:10000 Series)			
		(IC1401 is not included in this complete board.)			
		< CAPACITOR >			
C1401	1-164-156-11	CERAMIC CHIP	0.1uF		25V
C1405	1-135-210-11	TANTALUM CHIP	4.7uF	20%	10V
C1406	1-135-214-21	TANTAL. CHIP	4.7uF	20%	20V
C1407	1-135-210-11	TANTALUM CHIP	4.7uF	20%	10V
C1409	1-162-970-11	CERAMIC CHIP	0.01uF	10%	25V
C1412	1-135-259-11	TANTAL. CHIP	10uF	20%	6.3V
		< CONNECTOR >			
CN1401	1-766-346-21	CONNECTOR, FFC/FPC 16P			
		< IC >			
IC1401	A-7030-981-A	CCD BLOCK ASSY (CCD IMAGER)			
IC1402	8-759-533-83	IC AD8011AR-REEL			
		< COIL >			
L1401	1-414-757-11	INDUCTOR 100uH			
L1402	1-414-754-11	INDUCTOR 10uH			
		< RESISTOR >			
R1405	1-216-864-11	METAL CHIP	0	5%	1/16W
R1406	1-216-829-11	METAL CHIP	4.7K	5%	1/16W
R1407	1-216-830-11	METAL CHIP	5.6K	5%	1/16W
R1408	1-216-821-11	METAL CHIP	1K	5%	1/16W
R1409	1-216-808-11	METAL CHIP	82	5%	1/16W
	A-7073-878-A	CF-58 (C) BOARD, COMPLETE (TR950E)			
		**********			
	A-7073-907-A	CF-58 BOARD, COMPLETE (TR913E)			
		**********			
		(Ref.No.:2000 Series)			
		< BATTERY HOLDER >			
BH001	1-550-104-11	HOLDER, BATTERY			
		< BUZZER >			
BZ001	1-529-107-11	BUZZER, PIEZOELECTRIC			

Ref. No.	Part No.	Description			Remarks
		< CAPACITOR >			
C003	1-107-826-91	CERAMIC CHIP	0.1uF	10%	16V
		< CONNECTOR >			
CN001	1-778-637-21	CONNECTOR, FFC/FPC (ZIF) 50P			
CN002	1-774-765-11	CONNECTOR, FFC/FPC 8P			
CN007	1-779-334-11	CONNECTOR, FFC/FPC 20P (TR950E)			
* CN008	1-778-283-11	CONNECTOR, FFC/FPC 4P (TR913E)			
CN009	1-691-364-21	CONNECTOR, FFC/FPC (ZIF) 26P			
CN010	1-779-328-21	CONNECTOR, FFC/FPC 8P			
		< DIODE >			
D005	8-719-073-03	DIODE MA8082-(K8).S0			
D006	8-719-073-03	DIODE MA8082-(K8).S0			
D008	8-719-073-01	DIODE MA111-(K8).S0			
D013	8-719-073-03	DIODE MA8082-(K8).S0			
		< IC >			
IC001	8-759-573-02	IC BU9735K-E2			
		< TRANSISTOR >			
Q001	8-729-042-29	TRANSISTOR RN1104F(TPL3) (TR913E)			
Q003	8-729-037-52	TRANSISTOR 2SC4738F-Y/GR(TPL3)			
Q005	8-729-230-72	TRANSISTOR 2SA1362-YG-EL			
		< RESISTOR >			
R003	1-216-833-11	METAL CHIP	10K	5%	1/16W
R005	1-216-833-11	METAL CHIP	10K	5%	1/16W
R006	1-216-833-11	METAL CHIP	10K	5%	1/16W
R007	1-216-833-11	METAL CHIP	10K	5%	1/16W
R008	1-216-833-11	METAL CHIP	10K	5%	1/16W
R009	1-216-833-11	METAL CHIP	10K	5%	1/16W
R011	1-216-855-11	METAL CHIP	680K	5%	1/16W
R012	1-216-864-11	METAL CHIP	0	5%	1/16W
R013	1-216-822-11	METAL CHIP	1.2K	5%	1/16W
R014	1-216-826-11	METAL CHIP	2.7K	5%	1/16W
R016	1-216-822-11	METAL CHIP	1.2K	5%	1/16W
R020	1-216-823-11	METAL CHIP	1.5K	5%	1/16W
R022	1-216-823-11	METAL CHIP	1.5K	5%	1/16W
R023	1-216-825-11	METAL CHIP	2.2K	5%	1/16W
R025	1-216-825-11	METAL CHIP	2.2K	5%	1/16W

Be sure to read "Precautions upon replacing CCD imager" on page 4-9 when changing the CCD imager.

Ref. No.	Part No.	Description			Remarks
R026	1-216-825-11	METAL CHIP	2.2K	5%	1/16W
R029	1-216-828-11	METAL CHIP	3.9K	5%	1/16W
R031	1-216-828-11	METAL CHIP	3.9K	5%	1/16W
R036	1-216-832-11	METAL CHIP	8.2K	5%	1/16W
R038	1-216-832-11	METAL CHIP	8.2K	5%	1/16W
R039	1-216-838-11	METAL CHIP	27K	5%	1/16W
R041	1-216-838-11	METAL CHIP	27K	5%	1/16W
R042	1-216-809-11	METAL CHIP	100	5%	1/16W
R044	1-216-809-11	METAL CHIP	100	5%	1/16W
R046	1-216-840-11	METAL CHIP	39K	5%	1/16W
R049	1-216-849-11	METAL CHIP	220K	5%	1/16W
R050	1-216-853-11	METAL CHIP	470K	5%	1/16W
R051	1-216-837-11	METAL CHIP	22K	5%	1/16W
R052	1-216-829-11	METAL CHIP	4.7K	5%	1/16W
		< SWITCH >			
S001	1-762-851-21	SWITCH, KEY BOARD (DIGITAL EFFECT)			
S003	1-771-138-61	SWITCH, KEY BOARD (DATE)			
S004	1-771-138-61	SWITCH, KEY BOARD (PROGRAM AE)			
S006	1-771-138-61	SWITCH, KEY BOARD (PICTURE EFFECT)			
S008	1-771-138-61	SWITCH, KEY BOARD (COUNTER RESET)			
S010	1-771-029-21	SWITCH, TACTILE (MENU)			
S012	1-771-029-21	SWITCH, TACTILE (EXPOSURE)			
S015	1-771-025-41	SWITCH, ROTARY (ENCODER)(CONTROL)			
S017	1-771-138-61	SWITCH, KEY BOARD (BACK LIGHT)			
S018	1-771-138-61	SWITCH, KEY BOARD (TITLE)			
S021	1-771-138-61	SWITCH, KEY BOARD (TIME)			
S024	1-762-648-21	SWITCH, SLIDE (START/STOP)			
S027	1-771-138-61	SWITCH, KEY BOARD (FADER)			

	A-7073-879-A	DD-117 (CIB) BOARD, COMPLETE (TR950E)			
		**********			
	A-7073-908-A	DD-117 (I) BOARD, COMPLETE (TR913E)			
		**********			
		(Ref.No.:2000 Series)			
		< CAPACITOR >			
C801	1-162-967-11	CERAMIC CHIP	0.0033uF	10%	50V
C802	1-162-960-11	CERAMIC CHIP	220PF	10%	50V
C803	1-107-826-91	CERAMIC CHIP	0.1uF	10%	16V
C804	1-107-826-91	CERAMIC CHIP	0.1uF	10%	16V
C805	1-107-826-91	CERAMIC CHIP	0.1uF	10%	16V
C806	1-107-826-91	CERAMIC CHIP	0.1uF	10%	16V
C807	1-162-970-11	CERAMIC CHIP	0.01uF	10%	25V
C808	1-164-227-11	CERAMIC CHIP	0.022uF	10%	25V
C809	1-162-967-11	CERAMIC CHIP	0.0033uF	10%	50V
C810	1-164-227-11	CERAMIC CHIP	0.022uF	10%	25V
C811	1-162-965-11	CERAMIC CHIP	0.0015uF	10%	50V
C812	1-162-964-11	CERAMIC CHIP	0.001uF	10%	50V
C813	1-162-964-11	CERAMIC CHIP	0.001uF	10%	50V
C815	1-162-964-11	CERAMIC CHIP	0.001uF	10%	50V
C817	1-113-991-11	TANTAL. CHIP	33uF	20%	16V
C818	1-163-038-91	CERAMIC CHIP	0.1uF		25V
C819	1-162-964-11	CERAMIC CHIP	0.001uF	10%	50V
C820	1-162-964-11	CERAMIC CHIP	0.001uF	10%	50V
C821	1-162-964-11	CERAMIC CHIP	0.001uF	10%	50V
C823	1-115-566-11	CERAMIC CHIP	4.7uF	10%	10V

Ref. No.	Part No.	Description			Remarks
C824	1-115-566-11	CERAMIC CHIP	4.7uF	10%	10V
C825	1-115-566-11	CERAMIC CHIP	4.7uF	10%	10V
C832	1-115-566-11	CERAMIC CHIP	4.7uF	10%	10V
C834	1-115-566-11	CERAMIC CHIP	4.7uF	10%	10V
C836	1-115-566-11	CERAMIC CHIP	4.7uF	10%	10V
C837	1-115-566-11	CERAMIC CHIP	4.7uF	10%	10V
C838	1-115-566-11	CERAMIC CHIP	4.7uF	10%	10V
C841	1-135-149-21	TANTALUM CHIP	2.2uF	20%	10V
C843	1-135-157-21	TANTALUM CHIP	10uF	20%	6.3V
C844	1-135-157-21	TANTALUM CHIP	10uF	20%	6.3V
C846	1-135-149-21	TANTALUM CHIP	2.2uF	20%	10V
C847	1-164-506-11	CERAMIC CHIP	4.7uF		16V
C848	1-164-506-11	CERAMIC CHIP	4.7uF		16V
C850	1-135-149-21	TANTALUM CHIP	2.2uF	20%	10V
C851	1-135-157-21	TANTALUM CHIP	10uF	20%	6.3V
C854	1-135-157-21	TANTALUM CHIP	10uF	20%	6.3V (TR950E)
C855	1-135-149-21	TANTALUM CHIP	2.2uF	20%	10V
C857	1-135-157-21	TANTALUM CHIP	10uF	20%	6.3V
C860	1-107-826-91	CERAMIC CHIP	0.1uF	10%	16V
C861	1-164-227-11	CERAMIC CHIP	0.022uF	10%	25V (TR950E)
C864	1-113-985-11	TANTAL. CHIP	10uF	20%	20V
C867	1-164-346-11	CERAMIC CHIP	1uF		16V (TR950E)
C868	1-135-214-21	TANTAL. CHIP	4.7uF	20%	20V
C871	1-135-157-21	TANTALUM CHIP	10uF	20%	6.3V
C872	1-164-227-11	CERAMIC CHIP	0.022uF	10%	25V
C876	1-107-826-91	CERAMIC CHIP	0.1uF	10%	16V
C877	1-107-826-91	CERAMIC CHIP	0.1uF	10%	16V
		< CONNECTOR >			
* CN801	1-580-756-21	PIN, CONNECTOR (SMD) 7P			
CN931	1-774-597-41	CONNECTOR, BOARD TO BOARD 70P			
CN934	1-766-342-21	CONNECTOR, FFC/FPC 12P			
CN935	1-764-709-11	CONNECTOR, FFC/FPC (LIF) 10P			
CN936	1-774-631-21	CONNECTOR, FFC/FPC 6P			
		< DIODE >			
D809	8-719-027-77	DIODE MA796-TX			
D813	8-719-073-03	DIODE MA8082-(K8).S0			
D814	8-719-073-03	DIODE MA8082-(K8).S0			
D815	8-719-073-03	DIODE MA8082-(K8).S0			
D816	8-719-027-76	DIODE 1SS357-TPH3			
D817	8-719-073-02	DIODE MA728-(K8).S0			
D822	8-719-056-89	DIODE MA8120-TX			
D933	8-719-062-16	DIODE 01ZA8.2(TPL3)			
D934	8-719-062-16	DIODE 01ZA8.2(TPL3)			
D936	8-719-062-16	DIODE 01ZA8.2(TPL3)			
		< FERRITE BEAD >			
FB931	1-414-760-21	FERRITE 0UH			
FB932	1-414-760-21	FERRITE 0UH			
FB933	1-414-760-21	FERRITE 0UH			
		< IC >			
IC801	8-759-384-78	IC SN104241PM-TEB			

Ref. No.	Part No.	Description	Remarks
		< COIL >	
L805	1-409-532-41	INDUCTOR 33uH	
L806	1-409-532-41	INDUCTOR 33uH	
L807	1-424-674-11	INDUCTOR 22uH	
L808	1-424-674-11	INDUCTOR 22uH	
L809	1-424-674-11	INDUCTOR 22uH	
L810	1-414-396-21	INDUCTOR 4.7uH	
L811	1-414-396-21	INDUCTOR 4.7uH	
L812	1-414-396-21	INDUCTOR 4.7uH	
L813	1-414-396-21	INDUCTOR 4.7uH	
L814	1-414-396-21	INDUCTOR 4.7uH (TR913E)	
L814	1-414-400-11	INDUCTOR 22uH (TR950E)	
L815	1-414-396-21	INDUCTOR 4.7uH	
L816	1-414-396-21	INDUCTOR 4.7uH (TR950E)	
L817	1-414-396-21	INDUCTOR 4.7uH	
L819	1-414-400-11	INDUCTOR 22uH	
		< IC LINK >	
⚠PS801	1-576-286-21	FUSE, MICRO (1.4A/24V)	
⚠PS803	1-576-286-21	FUSE, MICRO (1.4A/24V)	
⚠PS804	1-576-286-21	FUSE, MICRO (1.4A/24V)	
⚠PS806	1-576-286-21	FUSE, MICRO (1.4A/24V)	
		< TRANSISTOR >	
Q801	8-729-024-48	TRANSISTOR 2SK1830-TE85L	
Q803	8-729-804-41	TRANSISTOR 2SB1122-ST-TD	
Q804	8-729-042-29	TRANSISTOR RN1104F(TPL3)	
Q805	8-729-024-48	TRANSISTOR 2SK1830-TE85L	
Q807	8-729-804-41	TRANSISTOR 2SB1122-ST-TD	
Q808	8-729-046-98	TRANSISTOR CPH6702-TL	
Q809	8-729-046-98	TRANSISTOR CPH6702-TL	
Q810	8-729-046-98	TRANSISTOR CPH6702-TL	
Q812	8-729-044-58	TRANSISTOR SI2304DS-T1	
Q814	8-729-046-98	TRANSISTOR CPH6702-TL	
Q815	8-729-046-98	TRANSISTOR CPH6702-TL	
Q817	8-729-044-58	TRANSISTOR SI2304DS-T1	
Q823	8-729-042-29	TRANSISTOR RN1104F(TPL3)	
Q826	8-729-042-29	TRANSISTOR RN1104F(TPL3) (TR950E)	
Q829	8-729-037-53	TRANSISTOR 2SA1832F-Y/GR(TPL3)	
Q830	8-729-037-52	TRANSISTOR 2SC4738F-Y/GR(TPL3)	
Q831	8-729-046-75	TRANSISTOR SI2301DS-T1 (TR950E)	
Q834	8-729-037-53	TRANSISTOR 2SA1832F-Y/GR(TPL3)	
Q837	8-729-037-52	TRANSISTOR 2SC4738F-Y/GR(TPL3)(TR950E)	
Q841	8-729-037-53	TRANSISTOR 2SA1832F-Y/GR(TPL3)(TR950E)	
Q842	8-729-037-52	TRANSISTOR 2SC4738F-Y/GR(TPL3)	
Q843	8-729-037-53	TRANSISTOR 2SA1832F-Y/GR(TPL3)	
Q846	8-729-037-52	TRANSISTOR 2SC4738F-Y/GR(TPL3)(TR950E)	
Q847	8-729-037-52	TRANSISTOR 2SC4738F-Y/GR(TPL3)	
⚠Q851	8-729-046-77	TRANSISTOR SI4963DY-T1	
Q852	8-729-017-61	TRANSISTOR 2SB1581-T1	
Q853	8-729-037-53	TRANSISTOR 2SA1832F-Y/GR(TPL3)	
Q854	8-729-037-52	TRANSISTOR 2SC4738F-Y/GR(TPL3)	
Q855	8-729-037-52	TRANSISTOR 2SC4738F-Y/GR(TPL3)	
Q856	8-729-037-52	TRANSISTOR 2SC4738F-Y/GR(TPL3)	
Q932	8-729-042-29	TRANSISTOR RN1104F(TPL3)	
Q933	8-729-042-29	TRANSISTOR RN1104F(TPL3)	
Q934	8-729-037-53	TRANSISTOR 2SA1832F-Y/GR(TPL3)	

Ref. No.	Part No.	Description			Remarks
		< RESISTOR >			
R801	1-216-841-11	METAL CHIP	47K	5%	1/16W
R802	1-218-893-11	RES,CHIP	82K	0.50%	1/16W
R803	1-216-833-11	METAL CHIP	10K	5%	1/16W
R804	1-216-837-11	METAL CHIP	22K	5%	1/16W
R805	1-216-835-11	METAL CHIP	15K	5%	1/16W
R806	1-218-879-11	RES,CHIP	22K	0.50%	1/16W
R807	1-216-839-11	METAL CHIP	33K	5%	1/16W
R808	1-218-879-11	RES,CHIP	22K	0.50%	1/16W
R809	1-216-813-11	METAL CHIP	220	5%	1/16W
R810	1-216-837-11	METAL CHIP	22K	5%	1/16W
R811	1-218-883-11	RES,CHIP	33K	0.50%	1/16W
R812	1-218-901-11	RES,CHIP	180K	0.50%	1/16W
R813	1-216-853-11	METAL CHIP	470K	5%	1/16W
R814	1-218-879-11	RES,CHIP	22K	0.50%	1/16W
R815	1-216-813-11	METAL CHIP	220	5%	1/16W
R816	1-218-879-11	RES,CHIP	22K	0.50%	1/16W
R817	1-218-879-11	RES,CHIP	22K	0.50%	1/16W
R818	1-216-813-11	METAL CHIP	220	5%	1/16W
R819	1-218-887-11	RES,CHIP	47K	0.50%	1/16W
R820	1-216-845-11	METAL CHIP	100K	5%	1/16W
R821	1-218-879-11	RES,CHIP	22K	0.50%	1/16W
R822	1-216-150-91	RES,CHIP	10	5%	1/8W
R824	1-216-837-11	METAL CHIP	22K	5%	1/16W
R825	1-218-879-11	RES,CHIP	22K	0.50%	1/16W
R826	1-216-821-11	METAL CHIP	1K	5%	1/16W
R827	1-216-821-11	METAL CHIP	1K	5%	1/16W
R828	1-216-831-11	METAL CHIP	6.8K	5%	1/16W
R829	1-216-837-11	METAL CHIP	22K	5%	1/16W
R830	1-218-883-11	RES,CHIP	33K	0.50%	1/16W
R831	1-216-841-11	METAL CHIP	47K	5%	1/16W
R832	1-218-879-11	RES,CHIP	22K	0.50%	1/16W
R833	1-216-839-11	METAL CHIP	33K	5%	1/16W
R834	1-218-881-11	RES,CHIP	27K	0.50%	1/16W
R835	1-218-879-11	RES,CHIP	22K	0.50%	1/16W
R836	1-216-837-11	METAL CHIP	22K	5%	1/16W
R837	1-216-826-11	METAL CHIP	2.7K	5%	1/16W
R838	1-216-837-11	METAL CHIP	22K	5%	1/16W
R839	1-216-837-11	METAL CHIP	22K	5%	1/16W
R840	1-216-839-11	METAL CHIP	33K	5%	1/16W
R841	1-216-834-11	METAL CHIP	12K	5%	1/16W
R844	1-216-296-91	SHORT	0		
R846	1-216-296-91	SHORT	0		
R847	1-216-296-91	SHORT	0		
R865	1-216-841-11	METAL CHIP	47K	5%	1/16W
R866	1-216-837-11	METAL CHIP	22K	5%	1/16W
R867	1-216-296-91	SHORT	0		
R870	1-216-845-11	METAL CHIP	100K	5%	1/16W (TR950E)
R871	1-216-857-11	METAL CHIP	1M	5%	1/16W (TR950E)
R872	1-216-845-11	METAL CHIP	100K	5%	1/16W
R873	1-216-841-11	METAL CHIP	47K	5%	1/16W
R877	1-216-864-11	METAL CHIP	0	5%	1/16W (TR913E)
R879	1-216-837-11	METAL CHIP	22K	5%	1/16W
R880	1-218-895-11	RES,CHIP	100K	0.50%	1/16W
R881	1-216-864-11	METAL CHIP	0	5%	1/16W
R882	1-218-903-11	RES,CHIP	220K	0.50%	1/16W

Note : The components identified by mark ⚠ or dotted line with mark ⚠ are critical for safety.
Replace only with part number specified.

Ref. No.	Part No.	Description			Remarks
R885	1-216-845-11	METAL CHIP	100K	5%	1/16W (TR950E)
R889	1-216-837-11	METAL CHIP	22K	5%	1/16W (TR950E)
R890	1-216-845-11	METAL CHIP	100K	5%	1/16W
R894	1-216-857-11	METAL CHIP	1M	5%	1/16W (TR950E)
R895	1-216-837-11	METAL CHIP	22K	5%	1/16W
R898	1-218-897-11	RES,CHIP	120K	0.50%	1/16W (TR950E)
R899	1-218-883-11	RES,CHIP	33K	0.50%	1/16W (TR950E)
R900	1-218-895-11	RES,CHIP	100K	0.50%	1/16W
R901	1-218-887-11	RES,CHIP	47K	0.50%	1/16W
R902	1-216-864-11	METAL CHIP	0	5%	1/16W
R908	1-216-841-11	METAL CHIP	47K	5%	1/16W
R910	1-216-833-11	METAL CHIP	10K	5%	1/16W
R911	1-218-883-11	RES,CHIP	33K	0.50%	1/16W
R912	1-218-879-11	RES,CHIP	22K	0.50%	1/16W
R913	1-216-857-11	METAL CHIP	1M	5%	1/16W
R916	1-216-864-11	METAL CHIP	0	5%	1/16W
R921	1-216-296-91	SHORT	0		
R922	1-216-296-91	SHORT	0		
R923	1-216-296-91	SHORT	0		
R926	1-216-821-11	METAL CHIP	1K	5%	1/16W
R932	1-216-841-11	METAL CHIP	47K	5%	1/16W
R933	1-216-821-11	METAL CHIP	1K	5%	1/16W
R934	1-216-821-11	METAL CHIP	1K	5%	1/16W
R935	1-216-821-11	METAL CHIP	1K	5%	1/16W
R936	1-216-821-11	METAL CHIP	1K	5%	1/16W
R937	1-216-821-11	METAL CHIP	1K	5%	1/16W
R938	1-216-821-11	METAL CHIP	1K	5%	1/16W
R939	1-216-821-11	METAL CHIP	1K	5%	1/16W
R940	1-216-819-11	METAL CHIP	680	5%	1/16W
R941	1-216-821-11	METAL CHIP	1K	5%	1/16W
R942	1-216-821-11	METAL CHIP	1K	5%	1/16W
R943	1-216-029-00	METAL CHIP	150	5%	1/10W
R944	1-216-864-11	METAL CHIP	0	5%	1/16W
		< TRANSFORMER >			
⚠T801	1-431-749-11	TRANSFORMER, DC/DC CONVERTER			

FP-249 BOARD, COMPLETE (Not Supplied)
****
(Ref.No.:5000 Series)

1-658-214-11	FP-356 FLEXIBLE BOARD	
3-965-551-01	HOLDER (S), SENSOR	
3-965-552-01	HOLDER (T), SENSOR	
	< HOLE ELEMENT >	
H001	8-719-033-37	ELEMENT, HALL HW-105C
H002	8-719-033-37	ELEMENT, HALL HW-105C
	< TRANSISTOR >	
Q001	8-729-907-25	PHOTO TRANSISTOR PT4850F
Q002	8-729-907-25	PHOTO TRANSISTOR PT4850F

Ref. No.	Part No.	Description	Remarks
		< SWITCH >	
S001	1-692-614-11	SWITCH, PUSH (3 KEY)	(Hi8 MP,ME/MP,REC PROOF)
S002	1-572-688-11	SWITCH, PUSH (1 KEY) (C.C.LOCK)	
	1-658-213-11	FP-355 FLEXIBLE BOARD	
		**********	(Ref.No.:5000 Series)
		< DIODE >	
D001	8-719-988-42	DIODE GL453	

A-7073-877-A MA-353 (IB) BOARD, COMPLETE
****
(Ref.No.:2000 Series)

		< CAPACITOR >			
C301	1-107-686-11	TANTAL. CHIP	4.7uF	20%	16V
C302	1-107-826-91	CERAMIC CHIP	0.1uF	10%	16V
C303	1-107-826-91	CERAMIC CHIP	0.1uF	10%	16V
C304	1-107-826-91	CERAMIC CHIP	0.1uF	10%	16V
C305	1-107-826-91	CERAMIC CHIP	0.1uF	10%	16V
C337	1-135-259-11	TANTAL. CHIP	10uF	20%	6.3V
C338	1-162-964-11	CERAMIC CHIP	0.001uF	10%	50V
C339	1-164-227-11	CERAMIC CHIP	0.022uF	10%	25V
C340	1-162-927-11	CERAMIC CHIP	100PF	5%	50V
C341	1-165-176-11	CERAMIC CHIP	0.047uF	10%	16V
C343	1-162-970-11	CERAMIC CHIP	0.01uF	10%	25V
C344	1-107-826-91	CERAMIC CHIP	0.1uF	10%	16V
C345	1-107-826-91	CERAMIC CHIP	0.1uF	10%	16V
C347	1-162-970-11	CERAMIC CHIP	0.01uF	10%	25V
C348	1-162-970-11	CERAMIC CHIP	0.01uF	10%	25V
C349	1-107-826-91	CERAMIC CHIP	0.1uF	10%	16V
C350	1-135-259-11	TANTAL. CHIP	10uF	20%	6.3V
C351	1-164-227-11	CERAMIC CHIP	0.022uF	10%	25V
C352	1-162-964-11	CERAMIC CHIP	0.001uF	10%	50V
C353	1-162-927-11	CERAMIC CHIP	100PF	5%	50V
C354	1-165-176-11	CERAMIC CHIP	0.047uF	10%	16V
C355	1-164-245-11	CERAMIC CHIP	0.015uF	10%	25V
C356	1-164-227-11	CERAMIC CHIP	0.022uF	10%	25V
C357	1-164-245-11	CERAMIC CHIP	0.015uF	10%	25V
C358	1-164-245-11	CERAMIC CHIP	0.015uF	10%	25V
C359	1-162-968-11	CERAMIC CHIP	0.0047uF	10%	50V
C360	1-164-227-11	CERAMIC CHIP	0.022uF	10%	25V
C361	1-164-227-11	CERAMIC CHIP	0.022uF	10%	25V
C362	1-164-245-11	CERAMIC CHIP	0.015uF	10%	25V
C363	1-162-968-11	CERAMIC CHIP	0.0047uF	10%	50V
C364	1-164-245-11	CERAMIC CHIP	0.015uF	10%	25V
C365	1-164-227-11	CERAMIC CHIP	0.022uF	10%	25V
C366	1-164-227-11	CERAMIC CHIP	0.022uF	10%	25V
C367	1-164-227-11	CERAMIC CHIP	0.022uF	10%	25V
C368	1-164-245-11	CERAMIC CHIP	0.015uF	10%	25V
C369	1-162-962-11	CERAMIC CHIP	470PF	10%	50V
C370	1-162-962-11	CERAMIC CHIP	470PF	10%	50V
C371	1-164-346-11	CERAMIC CHIP	1uF		16V
C372	1-164-346-11	CERAMIC CHIP	1uF		16V
C373	1-164-156-11	CERAMIC CHIP	0.1uF		25V

Note : The components identified by mark ⚠ or dotted line with mark ⚠ are critical for safety.
Replace only with part number specified.

Ref. No.	Part No.	Description			Remarks
C376	1-135-259-11	TANTAL. CHIP	10uF	20%	6.3V
C377	1-162-960-11	CERAMIC CHIP	220PF	10%	50V
C378	1-165-128-11	CERAMIC CHIP	0.22uF		16V
		< CONNECTOR >			
CN301	1-695-320-21	PIN, CONNECTOR (1.5MM)(SMD) 2P			
CN302	1-695-320-21	PIN, CONNECTOR (1.5MM)(SMD) 2P			
CN303	1-779-334-11	CONNECTOR, FFC/FPC 20P			
		< DIODE >			
D301	8-719-061-86	DIODE DCR2810			
D302	8-749-060-65	DIODE DCC3810			
D303	8-719-061-82	DIODE TLSU1002(TPX1,SONY)			
D305	8-719-073-01	DIODE MA111-(K8).S0			
D321	8-719-073-03	DIODE MA8082-(K8).S0			
D322	8-719-073-03	DIODE MA8082-(K8).S0			
D323	8-719-073-01	DIODE MA111-(K8).S0			
		< FUSE >			
⚠F301	1-533-874-11	FUSE, MICRO (200mA/24V)			
		< IC >			
IC301	8-749-012-83	IC RS-180-T			
IC322	8-759-494-54	IC AN2900FH-EB			
		< JACK >			
J301	1-691-737-11	JACK (SMALL TYPE)(MIC(PLUG IN POWER))			
		< COIL >			
L301	1-414-754-11	INDUCTOR 10uH			
		< TRANSISTOR >			
Q301	8-729-420-24	TRANSISTOR 2SB1218A-QRS-TX			
Q302	8-729-122-63	TRANSISTOR 2SA1226-T1E4			
Q303	8-729-140-75	TRANSISTOR 2SD999-T1-CLCK			
Q304	8-729-402-42	TRANSISTOR UN5213-TX			
		< RESISTOR >			
R301	1-216-823-11	METAL CHIP	1.5K	5%	1/16W
R302	1-216-810-11	METAL CHIP	120	5%	1/16W
R303	1-216-817-11	METAL CHIP	470	5%	1/16W
R304	1-216-311-00	METAL CHIP	6.8	5%	1/10W
R305	1-216-302-00	METAL CHIP	2.7	5%	1/10W
R306	1-216-864-11	METAL CHIP	0	5%	1/16W
R308	1-216-837-11	METAL CHIP	22K	5%	1/16W
R309	1-216-847-11	METAL CHIP	150K	5%	1/16W
R310	1-216-824-11	METAL CHIP	1.8K	5%	1/16W
R311	1-216-864-11	METAL CHIP	0	5%	1/16W
R312	1-216-864-11	METAL CHIP	0	5%	1/16W
R315	1-216-864-11	METAL CHIP	0	5%	1/16W
R321	1-216-864-11	METAL CHIP	0	5%	1/16W
R322	1-216-864-11	METAL CHIP	0	5%	1/16W
R323	1-216-864-11	METAL CHIP	0	5%	1/16W
R324	1-216-864-11	METAL CHIP	0	5%	1/16W
R339	1-216-831-11	METAL CHIP	6.8K	5%	1/16W
R340	1-216-825-11	METAL CHIP	2.2K	5%	1/16W
R341	1-216-821-11	METAL CHIP	1K	5%	1/16W
R342	1-216-830-11	METAL CHIP	5.6K	5%	1/16W

Ref. No.	Part No.	Description			Remarks
R343	1-216-831-11	METAL CHIP	6.8K	5%	1/16W
R344	1-216-833-11	METAL CHIP	10K	5%	1/16W
R345	1-216-821-11	METAL CHIP	1K	5%	1/16W
R346	1-216-825-11	METAL CHIP	2.2K	5%	1/16W
R347	1-216-831-11	METAL CHIP	6.8K	5%	1/16W
R348	1-216-830-11	METAL CHIP	5.6K	5%	1/16W
R349	1-216-831-11	METAL CHIP	6.8K	5%	1/16W
R350	1-216-864-11	METAL CHIP	0	5%	1/16W
R351	1-216-836-11	METAL CHIP	18K	5%	1/16W
R352	1-216-839-11	METAL CHIP	33K	5%	1/16W
R353	1-216-839-11	METAL CHIP	33K	5%	1/16W
R354	1-216-831-11	METAL CHIP	6.8K	5%	1/16W
R355	1-216-833-11	METAL CHIP	10K	5%	1/16W
R356	1-216-864-11	METAL CHIP	0	5%	1/16W
R357	1-216-831-11	METAL CHIP	6.8K	5%	1/16W
R358	1-216-836-11	METAL CHIP	18K	5%	1/16W
R359	1-216-835-11	METAL CHIP	15K	5%	1/16W
R360	1-216-835-11	METAL CHIP	15K	5%	1/16W
R361	1-216-835-11	METAL CHIP	15K	5%	1/16W
R362	1-216-835-11	METAL CHIP	15K	5%	1/16W
R363	1-216-830-11	METAL CHIP	5.6K	5%	1/16W
R364	1-216-839-11	METAL CHIP	33K	5%	1/16W
R365	1-216-834-11	METAL CHIP	12K	5%	1/16W
R366	1-216-839-11	METAL CHIP	33K	5%	1/16W
R367	1-216-818-11	METAL CHIP	560	5%	1/16W
R368	1-216-832-11	METAL CHIP	8.2K	5%	1/16W
		< SWITCH >			
S301	1-692-605-11	SWITCH, SLIDE (VIDEO LIGHT)			
S302	1-771-331-41	SWITCH, PUSH (1 KEY)(POWER(PLAYER))			
* S303	1-771-331-21	SWITCH, PUSH (1 KEY)(POWER(CAMERA))			

	A-7073-881-A	PJ-94 (E) BOARD, COMPLETE			
		**********			
		(Ref.No.:2000 Series)			
		< CAPACITOR >			
C101	1-110-569-11	TANTAL. CHIP	47uF	20%	6.3V
C103	1-162-964-11	CERAMIC CHIP	0.001uF	10%	50V
C104	1-162-964-11	CERAMIC CHIP	0.001uF	10%	50V
C105	1-162-964-11	CERAMIC CHIP	0.001uF	10%	50V
C106	1-162-964-11	CERAMIC CHIP	0.001uF	10%	50V
C107	1-162-964-11	CERAMIC CHIP	0.001uF	10%	50V
C108	1-162-964-11	CERAMIC CHIP	0.001uF	10%	50V
		< CONNECTOR >			
* CN101	1-764-521-11	CONNECTOR, FFC/FPC (ZIF) 12P			
		< DIODE >			
D101	8-719-062-16	DIODE 01ZA8.2(TPL3)			
D102	8-719-062-16	DIODE 01ZA8.2(TPL3)			
D103	8-719-062-16	DIODE 01ZA8.2(TPL3)			
D104	8-719-073-03	DIODE MA8082-(K8).S0			
D105	8-719-062-16	DIODE 01ZA8.2(TPL3)			
D106	8-719-062-16	DIODE 01ZA8.2(TPL3)			

Note : The components identified by mark ⚠ or dotted line with mark ⚠ are critical for safety.
Replace only with part number specified.

Ref. No.	Part No.	Description			Remarks
		< JACK >			
J101	1-537-747-21	TERMINAL BOARD (S VIDEO/VIDEO/AUDIO)			
		< COIL >			
L101	1-414-072-11	INDUCTOR 1uH			
L102	1-412-963-11	INDUCTOR 100uH			
L103	1-412-963-11	INDUCTOR 100uH			
L104	1-412-963-11	INDUCTOR 100uH			
		< TRANSISTOR >			
Q101	8-729-101-07	TRANSISTOR 2SB798-T1-DLDK			
Q102	8-729-037-52	TRANSISTOR 2SC4738F-Y/GR(TPL3)			
		< RESISTOR >			
R101	1-216-864-11	METAL CHIP	0	5%	1/16W
R102	1-216-138-00	METAL CHIP	3.3	5%	1/8W
R103	1-216-830-11	METAL CHIP	5.6K	5%	1/16W
R104	1-216-820-11	METAL CHIP	820	5%	1/16W
R105	1-216-836-11	METAL CHIP	18K	5%	1/16W
R106	1-216-864-11	METAL CHIP	0	5%	1/16W
R107	1-216-864-11	METAL CHIP	0	5%	1/16W
R108	1-216-821-11	METAL CHIP	1K	5%	1/16W
R109	1-216-821-11	METAL CHIP	1K	5%	1/16W
	A-7073-880-A	SE-85 (EM) BOARD, COMPLETE			
		**********			
		(Ref.No.:2000 Series)			
		< CAPACITOR >			
C451	1-164-004-11	CERAMIC CHIP	0.1uF	10%	25V
C452	1-164-004-11	CERAMIC CHIP	0.1uF	10%	25V
C453	1-104-847-11	TANTAL. CHIP	22uF	20%	4V
C454	1-104-847-11	TANTAL. CHIP	22uF	20%	4V
C457	1-164-343-11	CERAMIC CHIP	0.056uF	10%	25V
C458	1-164-343-11	CERAMIC CHIP	0.056uF	10%	25V
C459	1-164-343-11	CERAMIC CHIP	0.056uF	10%	25V
C460	1-110-666-11	ELECT CHIP	22uF	20%	6.3V
C461	1-164-343-11	CERAMIC CHIP	0.056uF	10%	25V
C462	1-110-666-11	ELECT CHIP	22uF	20%	6.3V
C464	1-110-501-11	CERAMIC CHIP	0.33uF	10%	16V
C465	1-135-201-11	TANTALUM CHIP	10uF	20%	4V
C466	1-162-970-11	CERAMIC CHIP	0.01uF	10%	25V
C467	1-162-964-11	CERAMIC CHIP	0.001uF	10%	50V
C468	1-162-964-11	CERAMIC CHIP	0.001uF	10%	50V
C469	1-162-964-11	CERAMIC CHIP	0.001uF	10%	50V
C470	1-162-964-11	CERAMIC CHIP	0.001uF	10%	50V
		< CONNECTOR >			
CN451	1-691-348-11	CONNECTOR, FFC/FPC (ZIF) 10P			
		< DIODE >			
D451	8-719-062-16	DIODE 01ZA8.2(TPL3)			
D452	8-719-062-16	DIODE 01ZA8.2(TPL3)			
		< IC >			
IC451	8-759-489-19	IC uPC6756GR-8JG-E2			

Ref. No.	Part No.	Description			Remarks
		< JACK >			
J451	1-695-514-21	JACK (SMALL TYPE) 1P (HEAD PHONES)			
		< COIL >			
L451	1-414-754-11	INDUCTOR 10uH			
L453	1-412-963-11	INDUCTOR 100uH			
L454	1-412-963-11	INDUCTOR 100uH			
		< RESISTOR >			
R451	1-216-837-11	METAL CHIP	22K	5%	1/16W
R452	1-216-837-11	METAL CHIP	22K	5%	1/16W
R453	1-216-837-11	METAL CHIP	22K	5%	1/16W
R454	1-216-837-11	METAL CHIP	22K	5%	1/16W
R456	1-216-857-11	METAL CHIP	1M	5%	1/16W
R457	1-216-833-11	METAL CHIP	10K	5%	1/16W
R458	1-216-833-11	METAL CHIP	10K	5%	1/16W
R459	1-216-857-11	METAL CHIP	1M	5%	1/16W
R461	1-216-835-11	METAL CHIP	15K	5%	1/16W
		< SENSOR >			
SE451	1-803-042-31	SENSOR, ANGULAR VELOCITY (PITCH)			
SE452	1-803-042-41	SENSOR, ANGULAR VELOCITY (YAW)			
	A-7094-197-A	VC-214 (CIBE) BOARD, COMPLETE (SERVICE)			
		(TR950E)			
		**********			
	A-7094-200-A	VC-214 (IBE) BOARD, COMPLETE (SERVICE)			
		(TR913E)			
		**********			
		(Ref.No.:1000 Series)			
		< CAPACITOR >			
C001	1-162-970-11	CERAMIC CHIP	0.01uF	10%	25V
C004	1-162-970-11	CERAMIC CHIP	0.01uF	10%	25V
C006	1-104-752-11	TANTAL. CHIP	33uF	20%	6.3V
C007	1-104-752-11	TANTAL. CHIP	33uF	20%	6.3V
C008	1-162-927-11	CERAMIC CHIP	100PF	5%	50V
C009	1-164-217-11	CERAMIC CHIP	150PF	5%	50V
C011	1-162-926-11	CERAMIC CHIP	82PF	5%	50V
C012	1-162-927-11	CERAMIC CHIP	100PF	5%	50V
C021	1-164-156-11	CERAMIC CHIP	0.1uF		25V
C022	1-162-970-11	CERAMIC CHIP	0.01uF	10%	25V
C024	1-164-227-11	CERAMIC CHIP	0.022uF	10%	25V
C027	1-162-970-11	CERAMIC CHIP	0.01uF	10%	25V
C028	1-135-259-11	TANTAL. CHIP	10uF	20%	6.3V
C029	1-162-970-11	CERAMIC CHIP	0.01uF	10%	25V
C030	1-162-970-11	CERAMIC CHIP	0.01uF	10%	25V
C031	1-162-970-11	CERAMIC CHIP	0.01uF	10%	25V
C032	1-164-227-11	CERAMIC CHIP	0.022uF	10%	25V
C034	1-107-826-91	CERAMIC CHIP	0.1uF	10%	16V
C035	1-162-920-11	CERAMIC CHIP	27PF	5%	50V
C036	1-162-970-11	CERAMIC CHIP	0.01uF	10%	25V
C037	1-162-970-11	CERAMIC CHIP	0.01uF	10%	25V
C038	1-135-259-11	TANTAL. CHIP	10uF	20%	6.3V
C039	1-162-970-11	CERAMIC CHIP	0.01uF	10%	25V
C040	1-162-970-11	CERAMIC CHIP	0.01uF	10%	25V
C041	1-107-826-91	CERAMIC CHIP	0.1uF	10%	16V

Ref. No.	Part No.	Description			Remarks
C042	1-162-970-11	CERAMIC CHIP	0.01uF	10%	25V
C045	1-162-970-11	CERAMIC CHIP	0.01uF	10%	25V
C048	1-162-970-11	CERAMIC CHIP	0.01uF	10%	25V
C049	1-162-970-11	CERAMIC CHIP	0.01uF	10%	25V
C050	1-162-970-11	CERAMIC CHIP	0.01uF	10%	25V
C052	1-162-970-11	CERAMIC CHIP	0.01uF	10%	25V
C053	1-162-970-11	CERAMIC CHIP	0.01uF	10%	25V
C055	1-162-928-11	CERAMIC CHIP	120PF	5%	50V
C058	1-162-968-11	CERAMIC CHIP	0.0047uF	10%	50V
C059	1-162-928-11	CERAMIC CHIP	120PF	5%	50V
C060	1-163-809-11	CERAMIC CHIP	0.047uF	10%	25V
C061	1-162-970-11	CERAMIC CHIP	0.01uF	10%	25V
C062	1-162-926-11	CERAMIC CHIP	82PF	5%	50V
C065	1-162-970-11	CERAMIC CHIP	0.01uF	10%	25V
C068	1-162-921-11	CERAMIC CHIP	33PF	5%	50V
C069	1-162-970-11	CERAMIC CHIP	0.01uF	10%	25V
C070	1-162-908-11	CERAMIC CHIP	3PF	0.25PF	50V
C071	1-104-752-11	TANTAL. CHIP	33uF	20%	6.3V
C072	1-162-958-11	CERAMIC CHIP	270PF	5%	50V
C073	1-164-392-11	CERAMIC CHIP	390PF	5%	50V
C074	1-162-915-11	CERAMIC CHIP	10PF	0.5PF	50V
C075	1-162-959-11	CERAMIC CHIP	330PF	5%	50V
C076	1-162-922-11	CERAMIC CHIP	39PF	5%	50V
C078	1-162-928-11	CERAMIC CHIP	120PF	5%	50V
C079	1-162-922-11	CERAMIC CHIP	39PF	5%	50V
C080	1-162-915-11	CERAMIC CHIP	10PF	0.5PF	50V
C081	1-162-916-11	CERAMIC CHIP	12PF	5%	50V
C082	1-162-915-11	CERAMIC CHIP	10PF	0.5PF	50V
C083	1-162-924-11	CERAMIC CHIP	56PF	5%	50V
C085	1-162-970-11	CERAMIC CHIP	0.01uF	10%	25V
C086	1-115-156-11	CERAMIC CHIP	1uF		10V
C088	1-162-925-11	CERAMIC CHIP	68PF	5%	50V
C089	1-162-923-11	CERAMIC CHIP	47PF	5%	50V
C090	1-162-958-11	CERAMIC CHIP	270PF	5%	50V
C152	1-162-970-11	CERAMIC CHIP	0.01uF	10%	25V
C156	1-164-677-11	CERAMIC CHIP	0.033uF	10%	16V
C158	1-162-970-11	CERAMIC CHIP	0.01uF	10%	25V
C159	1-164-346-11	CERAMIC CHIP	1uF		16V
C160	1-162-970-11	CERAMIC CHIP	0.01uF	10%	25V
C161	1-115-467-11	CERAMIC CHIP	0.22uF	10%	10V
C162	1-135-180-21	TANTALUM CHIP	3.3uF	20%	6.3V
C163	1-135-180-21	TANTALUM CHIP	3.3uF	20%	6.3V
C164	1-162-970-11	CERAMIC CHIP	0.01uF	10%	25V
C166	1-162-970-11	CERAMIC CHIP	0.01uF	10%	25V
C168	1-109-982-11	CERAMIC CHIP	1uF	10%	10V
C169	1-109-982-11	CERAMIC CHIP	1uF	10%	10V
C170	1-162-970-11	CERAMIC CHIP	0.01uF	10%	25V
C180	1-115-467-11	CERAMIC CHIP	0.22uF	10%	10V
C181	1-162-970-11	CERAMIC CHIP	0.01uF	10%	25V
C182	1-135-149-21	TANTALUM CHIP	2.2uF	20%	10V
C183	1-135-149-21	TANTALUM CHIP	2.2uF	20%	10V
C184	1-115-156-11	CERAMIC CHIP	1uF		10V
C185	1-126-246-11	ELECT CHIP	220uF	20%	4V
C187	1-126-246-11	ELECT CHIP	220uF	20%	4V
C188	1-135-259-11	TANTAL. CHIP	10uF	20%	6.3V

Ref. No.	Part No.	Description			Remarks
C190	1-107-826-91	CERAMIC CHIP	0.1uF	10%	16V
C191	1-162-970-11	CERAMIC CHIP	0.01uF	10%	25V
C192	1-119-750-11	TANTAL. CHIP	22uF	20%	6.3V
C202	1-135-259-11	TANTAL. CHIP	10uF	20%	6.3V
C204	1-162-964-11	CERAMIC CHIP	0.001uF	10%	50V
C205	1-115-156-11	CERAMIC CHIP	1uF		10V
C206	1-162-967-11	CERAMIC CHIP	0.0033uF	10%	50V
C207	1-162-965-11	CERAMIC CHIP	0.0015uF	10%	50V
C209	1-162-915-11	CERAMIC CHIP	10PF	0.5PF	50V
C210	1-162-922-11	CERAMIC CHIP	39PF	5%	50V
C211	1-135-181-21	TANTALUM CHIP	4.7uF	20%	6.3V
C212	1-164-392-11	CERAMIC CHIP	390PF	5%	50V
C217	1-162-970-11	CERAMIC CHIP	0.01uF	10%	25V
C218	1-107-823-11	CERAMIC CHIP	0.47uF	10%	16V
C219	1-109-982-11	CERAMIC CHIP	1uF	10%	10V
C224	1-162-927-11	CERAMIC CHIP	100PF	5%	50V
C225	1-162-970-11	CERAMIC CHIP	0.01uF	10%	25V
C226	1-109-982-11	CERAMIC CHIP	1uF	10%	10V
C227	1-135-201-11	TANTALUM CHIP	10uF	20%	4V
C229	1-162-970-11	CERAMIC CHIP	0.01uF	10%	25V
C230	1-115-156-11	CERAMIC CHIP	1uF		10V
C232	1-164-156-11	CERAMIC CHIP	0.1uF		25V
C233	1-135-201-11	TANTALUM CHIP	10uF	20%	4V
C234	1-162-970-11	CERAMIC CHIP	0.01uF	10%	25V
C235	1-162-970-11	CERAMIC CHIP	0.01uF	10%	25V
C237	1-164-156-11	CERAMIC CHIP	0.1uF		25V
C239	1-115-156-11	CERAMIC CHIP	1uF		10V
C243	1-162-970-11	CERAMIC CHIP	0.01uF	10%	25V
C244	1-115-156-11	CERAMIC CHIP	1uF		10V
C245	1-162-970-11	CERAMIC CHIP	0.01uF	10%	25V
C246	1-162-970-11	CERAMIC CHIP	0.01uF	10%	25V
C247	1-135-201-11	TANTALUM CHIP	10uF	20%	4V
C250	1-162-970-11	CERAMIC CHIP	0.01uF	10%	25V
C252	1-135-259-11	TANTAL. CHIP	10uF	20%	6.3V
C253	1-107-826-91	CERAMIC CHIP	0.1uF	10%	16V
C301	1-135-201-11	TANTALUM CHIP	10uF	20%	4V
C302	1-135-201-11	TANTALUM CHIP	10uF	20%	4V
C307	1-135-180-21	TANTALUM CHIP	3.3uF	20%	6.3V
C308	1-135-259-11	TANTAL. CHIP	10uF	20%	6.3V
C309	1-119-750-11	TANTAL. CHIP	22uF	20%	6.3V
C310	1-104-847-11	TANTAL. CHIP	22uF	20%	4V
C312	1-107-823-11	CERAMIC CHIP	0.47uF	10%	16V
C313	1-115-467-11	CERAMIC CHIP	0.22uF	10%	10V
C314	1-109-982-11	CERAMIC CHIP	1uF	10%	10V
C316	1-115-467-11	CERAMIC CHIP	0.22uF	10%	10V
C317	1-115-467-11	CERAMIC CHIP	0.22uF	10%	10V
C318	1-135-259-11	TANTAL. CHIP	10uF	20%	6.3V
C319	1-115-467-11	CERAMIC CHIP	0.22uF	10%	10V
C321	1-216-841-11	METAL CHIP	47K	5%	1/16W
C322	1-164-489-11	CERAMIC CHIP	0.22uF	10%	16V
C323	1-216-864-11	METAL CHIP	0	5%	1/16W
C324	1-109-982-11	CERAMIC CHIP	1uF	10%	10V
C325	1-107-826-91	CERAMIC CHIP	0.1uF	10%	16V
C326	1-109-982-11	CERAMIC CHIP	1uF	10%	10V
C328	1-109-982-11	CERAMIC CHIP	1uF	10%	10V

VC-214

Ref. No.	Part No.	Description			Remarks
C330	1-109-982-11	CERAMIC CHIP	1uF	10%	10V
C331	1-107-826-91	CERAMIC CHIP	0.1uF	10%	16V
C332	1-109-982-11	CERAMIC CHIP	1uF	10%	10V
C334	1-115-467-11	CERAMIC CHIP	0.22uF	10%	10V
C336	1-109-982-11	CERAMIC CHIP	1uF	10%	10V
C337	1-109-982-11	CERAMIC CHIP	1uF	10%	10V
C338	1-164-489-11	CERAMIC CHIP	0.22uF	10%	16V
C339	1-164-489-11	CERAMIC CHIP	0.22uF	10%	16V
C340	1-107-823-11	CERAMIC CHIP	0.47uF	10%	16V
C341	1-107-823-11	CERAMIC CHIP	0.47uF	10%	16V
C342	1-162-963-11	CERAMIC CHIP	680PF	10%	50V
C343	1-162-966-11	CERAMIC CHIP	0.0022uF	10%	50V
C344	1-162-963-11	CERAMIC CHIP	680PF	10%	50V
C345	1-164-182-11	CERAMIC CHIP	0.0033uF	10%	50V
C346	1-162-970-11	CERAMIC CHIP	0.01uF	10%	25V
C347	1-162-970-11	CERAMIC CHIP	0.01uF	10%	25V
C371	1-104-908-11	TANTAL. CHIP	47uF	20%	4V
C372	1-104-908-11	TANTAL. CHIP	47uF	20%	4V
C389	1-162-925-11	CERAMIC CHIP	68PF	5%	50V
C402	1-109-982-11	CERAMIC CHIP	1uF	10%	10V
C404	1-162-915-11	CERAMIC CHIP	10PF	0.5PF	50V
C405	1-162-915-11	CERAMIC CHIP	10PF	0.5PF	50V
C406	1-162-970-11	CERAMIC CHIP	0.01uF	10%	25V
C410	1-109-982-11	CERAMIC CHIP	1uF	10%	10V
C411	1-162-969-11	CERAMIC CHIP	0.0068uF	10%	25V
C412	1-162-969-11	CERAMIC CHIP	0.0068uF	10%	25V
C414	1-107-826-91	CERAMIC CHIP	0.1uF	10%	16V
C415	1-164-156-11	CERAMIC CHIP	0.1uF		25V
C416	1-164-156-11	CERAMIC CHIP	0.1uF		25V
C417	1-164-156-11	CERAMIC CHIP	0.1uF		25V
C418	1-164-156-11	CERAMIC CHIP	0.1uF		25V
C419	1-164-156-11	CERAMIC CHIP	0.1uF		25V
C420	1-162-970-11	CERAMIC CHIP	0.01uF	10%	25V
C421	1-162-970-11	CERAMIC CHIP	0.01uF	10%	25V
C501	1-162-919-11	CERAMIC CHIP	22PF	5%	50V
C502	1-162-964-11	CERAMIC CHIP	0.001uF	10%	50V
C503	1-162-919-11	CERAMIC CHIP	22PF	5%	50V
C506	1-115-156-11	CERAMIC CHIP	1uF		10V
C507	1-115-156-11	CERAMIC CHIP	1uF		10V
C509	1-135-214-21	TANTAL. CHIP	4.7uF	20%	20V
C510	1-135-201-11	TANTALUM CHIP	10uF	20%	4V
C512	1-107-826-91	CERAMIC CHIP	0.1uF	10%	16V
C513	1-115-156-11	CERAMIC CHIP	1uF		10V
C514	1-162-964-11	CERAMIC CHIP	0.001uF	10%	50V
C516	1-107-826-91	CERAMIC CHIP	0.1uF	10%	16V
C517	1-115-467-11	CERAMIC CHIP	0.22uF	10%	10V
C518	1-162-964-11	CERAMIC CHIP	0.001uF	10%	50V
C519	1-107-826-91	CERAMIC CHIP	0.1uF	10%	16V
C520	1-162-970-11	CERAMIC CHIP	0.01uF	10%	25V
C521	1-107-826-91	CERAMIC CHIP	0.1uF	10%	16V
C522	1-107-826-91	CERAMIC CHIP	0.1uF	10%	16V
C523	1-115-467-11	CERAMIC CHIP	0.22uF	10%	10V
C524	1-162-962-11	CERAMIC CHIP	470PF	10%	50V
C525	1-162-970-11	CERAMIC CHIP	0.01uF	10%	25V
C526	1-107-826-91	CERAMIC CHIP	0.1uF	10%	16V
C527	1-107-826-91	CERAMIC CHIP	0.1uF	10%	16V
C528	1-109-982-11	CERAMIC CHIP	1uF	10%	10V
C529	1-107-826-91	CERAMIC CHIP	0.1uF	10%	16V
C530	1-107-826-91	CERAMIC CHIP	0.1uF	10%	16V
C531	1-104-847-11	TANTAL. CHIP	22uF	20%	4V
C536	1-163-021-91	CERAMIC CHIP	0.01uF	10%	50V
C552	1-162-968-11	CERAMIC CHIP	0.0047uF	10%	50V
C553	1-162-970-11	CERAMIC CHIP	0.01uF	10%	25V
C554	1-162-970-11	CERAMIC CHIP	0.01uF	10%	25V
C555	1-107-826-91	CERAMIC CHIP	0.1uF	10%	16V
C556	1-162-970-11	CERAMIC CHIP	0.01uF	10%	25V
C557	1-162-962-11	CERAMIC CHIP	470PF	10%	50V
C558	1-164-489-11	CERAMIC CHIP	0.22uF	10%	16V
C559	1-162-970-11	CERAMIC CHIP	0.01uF	10%	25V
C560	1-164-156-11	CERAMIC CHIP	0.1uF		25V
C561	1-162-970-11	CERAMIC CHIP	0.01uF	10%	25V
C562	1-162-966-11	CERAMIC CHIP	0.0022uF	10%	50V
C563	1-162-970-11	CERAMIC CHIP	0.01uF	10%	25V
C564	1-104-752-11	TANTAL. CHIP	33uF	20%	6.3V
C565	1-107-823-11	CERAMIC CHIP	0.47uF	10%	16V
C566	1-115-156-11	CERAMIC CHIP	1uF		10V
C567	1-162-964-11	CERAMIC CHIP	0.001uF	10%	50V
C569	1-164-004-11	CERAMIC CHIP	0.1uF	10%	25V
C570	1-162-970-11	CERAMIC CHIP	0.01uF	10%	25V
C571	1-135-259-11	TANTAL. CHIP	10uF	20%	6.3V
C572	1-135-201-11	TANTALUM CHIP	10uF	20%	4V
C605	1-115-156-11	CERAMIC CHIP	1uF		10V
C607	1-164-156-11	CERAMIC CHIP	0.1uF		25V
C610	1-164-156-11	CERAMIC CHIP	0.1uF		25V
C611	1-164-156-11	CERAMIC CHIP	0.1uF		25V
C612	1-119-749-11	TANTAL. CHIP	33uF	20%	4V
C613	1-104-851-11	TANTAL. CHIP	10uF	20%	10V
C615	1-164-156-11	CERAMIC CHIP	0.1uF		25V
C616	1-164-156-11	CERAMIC CHIP	0.1uF		25V
C617	1-162-970-11	CERAMIC CHIP	0.01uF	10%	25V
C618	1-162-970-11	CERAMIC CHIP	0.01uF	10%	25V
C619	1-162-970-11	CERAMIC CHIP	0.01uF	10%	25V
C620	1-162-970-11	CERAMIC CHIP	0.01uF	10%	25V
C621	1-162-970-11	CERAMIC CHIP	0.01uF	10%	25V
C622	1-162-970-11	CERAMIC CHIP	0.01uF	10%	25V
C623	1-162-970-11	CERAMIC CHIP	0.01uF	10%	25V
C624	1-162-970-11	CERAMIC CHIP	0.01uF	10%	25V
C625	1-164-156-11	CERAMIC CHIP	0.1uF		25V
C626	1-164-156-11	CERAMIC CHIP	0.1uF		25V
C627	1-164-227-11	CERAMIC CHIP	0.022uF	10%	25V
C628	1-162-919-11	CERAMIC CHIP	22PF	5%	50V
C629	1-162-917-11	CERAMIC CHIP	15PF	5%	50V
C630	1-164-156-11	CERAMIC CHIP	0.1uF		25V
C634	1-164-156-11	CERAMIC CHIP	0.1uF		25V
C636	1-164-156-11	CERAMIC CHIP	0.1uF		25V
C637	1-162-969-11	CERAMIC CHIP	0.0068uF	10%	25V
C751	1-135-201-11	TANTALUM CHIP	10uF	20%	4V
C752	1-135-259-11	TANTAL. CHIP	10uF	20%	6.3V
C753	1-162-970-11	CERAMIC CHIP	0.01uF	10%	25V
C754	1-107-823-11	CERAMIC CHIP	0.47uF	10%	16V

Ref. No.	Part No.	Description			Remarks
C755	1-107-823-11	CERAMIC CHIP	0.47uF	10%	16V
C757	1-135-177-21	TANTALUM CHIP	1uF	20%	20V
C758	1-109-982-11	CERAMIC CHIP	1uF	10%	10V
C759	1-162-970-11	CERAMIC CHIP	0.01uF	10%	25V
C760	1-135-181-21	TANTALUM CHIP	4.7uF	20%	6.3V
C761	1-162-970-11	CERAMIC CHIP	0.01uF	10%	25V
C762	1-164-668-11	CERAMIC CHIP	510PF	5%	50V
C763	1-162-970-11	CERAMIC CHIP	0.01uF	10%	25V
C764	1-135-259-11	TANTAL. CHIP	10uF	20%	6.3V
C765	1-162-970-11	CERAMIC CHIP	0.01uF	10%	25V
C766	1-109-982-11	CERAMIC CHIP	1uF	10%	10V
C767	1-107-826-91	CERAMIC CHIP	0.1uF	10%	16V
C768	1-162-909-11	CERAMIC CHIP	4PF	0.25PF	50V
C769	1-107-823-11	CERAMIC CHIP	0.47uF	10%	16V
C770	1-107-823-11	CERAMIC CHIP	0.47uF	10%	16V
C771	1-162-921-11	CERAMIC CHIP	33PF	5%	50V
C772	1-109-982-11	CERAMIC CHIP	1uF	10%	10V
C773	1-162-922-11	CERAMIC CHIP	39PF	5%	50V
C774	1-109-982-11	CERAMIC CHIP	1uF	10%	10V
C775	1-107-826-91	CERAMIC CHIP	0.1uF	10%	16V
C777	1-162-970-11	CERAMIC CHIP	0.01uF	10%	25V
C778	1-162-970-11	CERAMIC CHIP	0.01uF	10%	25V
C781	1-104-847-11	TANTAL. CHIP	22uF	20%	4V
C801	1-107-826-91	CERAMIC CHIP	0.1uF	10%	16V
C802	1-107-826-91	CERAMIC CHIP	0.1uF	10%	16V
C803	1-107-826-91	CERAMIC CHIP	0.1uF	10%	16V
C804	1-162-968-11	CERAMIC CHIP	0.0047uF	10%	50V
C805	1-162-968-11	CERAMIC CHIP	0.0047uF	10%	50V
C806	1-107-826-91	CERAMIC CHIP	0.1uF	10%	16V
C807	1-162-968-11	CERAMIC CHIP	0.0047uF	10%	50V
C808	1-107-826-91	CERAMIC CHIP	0.1uF	10%	16V
C809	1-107-826-91	CERAMIC CHIP	0.1uF	10%	16V
C810	1-162-970-11	CERAMIC CHIP	0.01uF	10%	25V
C811	1-165-176-11	CERAMIC CHIP	0.047uF	10%	16V
C812	1-162-970-11	CERAMIC CHIP	0.01uF	10%	25V
C813	1-165-176-11	CERAMIC CHIP	0.047uF	10%	16V
C814	1-107-826-91	CERAMIC CHIP	0.1uF	10%	16V
C815	1-109-982-11	CERAMIC CHIP	1uF	10%	10V
C816	1-162-962-11	CERAMIC CHIP	470PF	10%	50V
C818	1-162-968-11	CERAMIC CHIP	0.0047uF	10%	50V
C819	1-165-176-11	CERAMIC CHIP	0.047uF	10%	16V
C820	1-107-826-91	CERAMIC CHIP	0.1uF	10%	16V
C821	1-162-970-11	CERAMIC CHIP	0.01uF	10%	25V
C822	1-162-970-11	CERAMIC CHIP	0.01uF	10%	25V
C823	1-164-156-11	CERAMIC CHIP	0.1uF		25V
C824	1-164-227-11	CERAMIC CHIP	0.022uF	10%	25V
C825	1-162-964-11	CERAMIC CHIP	0.001uF	10%	50V
C826	1-162-964-11	CERAMIC CHIP	0.001uF	10%	50V
C827	1-165-176-11	CERAMIC CHIP	0.047uF	10%	16V
C829	1-165-176-11	CERAMIC CHIP	0.047uF	10%	16V
C830	1-164-227-11	CERAMIC CHIP	0.022uF	10%	25V
C831	1-164-227-11	CERAMIC CHIP	0.022uF	10%	25V
C832	1-162-968-11	CERAMIC CHIP	0.0047uF	10%	50V
C834	1-164-156-11	CERAMIC CHIP	0.1uF		25V
C835	1-164-156-11	CERAMIC CHIP	0.1uF		25V
C837	1-164-505-11	CERAMIC CHIP	2.2uF		16V
C838	1-164-156-11	CERAMIC CHIP	0.1uF		25V
C839	1-164-816-11	CERAMIC CHIP	220PF	2%	50V
C840	1-107-826-91	CERAMIC CHIP	0.1uF	10%	16V

< CONNECTOR >

CN001	1-766-677-21	CONNECTOR, FFC/FPC 16P
CN501	1-779-332-11	CONNECTOR, FFC/FPC 16P
CN551	1-691-362-11	CONNECTOR, FFC/FPC (ZIF) 24P
CN901	1-766-644-21	CONNECTOR, FFC/FPC 8P
CN903	1-766-350-21	CONNECTOR, FFC/FPC 20P
CN904	1-774-644-21	CONNECTOR, FFC/FPC 22P
CN905	1-766-646-21	CONNECTOR, FFC/FPC 10P
CN906	1-766-342-21	CONNECTOR, FFC/FPC 12P
CN908	1-766-345-21	CONNECTOR, FFC/FPC 15P
CN909	1-774-635-21	CONNECTOR, FFC/FPC 10P
CN910	1-766-677-21	CONNECTOR, FFC/FPC 16P
CN911	1-778-637-21	CONNECTOR, FFC/FPC (ZIF) 50P
CN914	1-774-600-41	CONNECTOR, BOARD TO BOARD 70P

< DIODE >

D002	8-719-073-01	DIODE MA111-(K8).S0
D201	8-719-055-86	DIODE KV1470TL1-3
D202	8-719-055-86	DIODE KV1470TL1-3
D502	8-713-103-84	DIODE 1T379-01-T8A
D551	8-719-073-01	DIODE MA111-(K8).S0
D604	8-719-073-01	DIODE MA111-(K8).S0
D608	8-719-073-01	DIODE MA111-(K8).S0
D609	8-719-073-28	DIODE MA729-(K8).S0
D610	8-719-073-02	DIODE MA728-(K8).S0
D614	8-719-073-02	DIODE MA728-(K8).S0
D615	8-719-073-02	DIODE MA728-(K8).S0
D910	8-719-062-16	DIODE 01ZA8.2(TPL3)
D911	8-719-073-03	DIODE MA8082-(K8).S0

< FERRITE BEAD >

FB002	1-414-229-11	INDUCTOR CHIP 0UH
FB004	1-414-229-11	INDUCTOR CHIP 0UH
FB151	1-500-329-11	INDUCTOR CHIP 0UH
FB152	1-414-921-11	INDUCTOR CHIP 0UH
FB201	1-500-329-11	INDUCTOR CHIP 0UH
FB202	1-500-329-11	INDUCTOR CHIP 0UH
FB203	1-500-329-11	INDUCTOR CHIP 0UH
FB204	1-500-329-11	INDUCTOR CHIP 0UH
FB205	1-500-329-11	INDUCTOR CHIP 0UH
FB206	1-414-228-11	INDUCTOR CHIP 0UH
FB402	1-500-329-11	INDUCTOR CHIP 0UH
FB501	1-500-329-11	INDUCTOR CHIP 0UH
FB503	1-500-284-21	INDUCTOR CHIP 0UH
FB504	1-500-284-21	INDUCTOR CHIP 0UH
FB506	1-500-329-11	INDUCTOR CHIP 0UH
FB602	1-500-329-11	INDUCTOR CHIP 0UH

Ref. No.	Part No.	Description	Remarks
		< IC >	
IC001	8-752-075-31	IC CXA2012R-T4	
IC151	8-752-075-46	IC CXA2030R-T6	
IC152	8-759-536-93	IC M62371GP-600D	
IC201	8-759-579-44	IC MB90097PFV-G-118-BND-ER	
IC202	8-759-578-34	IC MB87F4090PFF-G-BND	
IC204	8-752-390-53	IC CXD3131R-T6	
IC301	8-752-089-62	IC CXA2087R-T6	
IC401	8-759-445-94	IC AK6480AM-E2	
IC402	8-759-566-89	IC MB91191PFF-G-123-BND-ER	
IC501	8-752-386-72	IC CXD2444R-T4	
IC502	8-759-570-81	IC AD9808AJSTRL	
IC551	8-759-444-87	IC NJM324V(TE2)	
IC552	8-759-475-79	IC uPD16833AG3-E2	
IC602	8-759-424-79	IC S-8423YFS-T2	
IC603	8-759-536-72	IC TL1596CPWR	
IC604	8-759-566-92	IC S579294PZ-TEB	
IC751	8-759-498-52	IC LA9511W-TBM	
IC801	8-759-327-67	IC LB1950V-TLM	
IC802	8-759-327-62	IC TA8482FN-EL	
		< COIL >	
L001	1-414-406-11	INDUCTOR 220uH	
L002	1-412-952-11	INDUCTOR 12uH	
L003	1-414-406-11	INDUCTOR 220uH	
L004	1-414-755-11	INDUCTOR 22uH	
L005	1-412-279-31	INDUCTOR 270uH	
L006	1-412-963-11	INDUCTOR 100uH	
L008	1-412-280-31	INDUCTOR 330uH	
L009	1-410-656-11	INDUCTOR CHIP 150uH	
L010	1-410-657-21	INDUCTOR CHIP 180uH	
L011	1-412-956-21	INDUCTOR 27uH	
L012	1-412-955-11	INDUCTOR 22uH	
L013	1-412-944-11	INDUCTOR 2.7uH	
L015	1-412-951-11	INDUCTOR 10uH	
L016	1-412-946-11	INDUCTOR 3.9uH	
L017	1-414-754-11	INDUCTOR 10uH	
L018	1-410-656-11	INDUCTOR CHIP 150uH	
L019	1-412-957-11	INDUCTOR 33uH	
L020	1-414-406-11	INDUCTOR 220uH	
L153	1-414-754-11	INDUCTOR 10uH	
L154	1-414-754-11	INDUCTOR 10uH	
L155	1-414-754-11	INDUCTOR 10uH	
L156	1-414-754-11	INDUCTOR 10uH	
L201	1-414-754-11	INDUCTOR 10uH	
L202	1-414-754-11	INDUCTOR 10uH	
L203	1-414-754-11	INDUCTOR 10uH	
L204	1-410-658-31	INDUCTOR CHIP 220uH	
L205	1-412-955-11	INDUCTOR 22uH	
L206	1-412-945-11	INDUCTOR 3.3uH	
L207	1-414-754-11	INDUCTOR 10uH	
L209	1-414-754-11	INDUCTOR 10uH	
L501	1-414-398-11	INDUCTOR 10uH	
L502	1-216-295-91	SHORT 0	
L552	1-414-398-11	INDUCTOR 10uH	
L553	1-414-754-11	INDUCTOR 10uH	
L555	1-414-754-11	INDUCTOR 10uH	
L751	1-412-948-11	INDUCTOR 5.6uH	
L752	1-412-957-11	INDUCTOR 33uH	
L753	1-412-957-11	INDUCTOR 33uH	
		< TRANSISTOR >	
Q001	8-729-047-19	TRANSISTOR 2SA1965-S-TL	
Q002	8-729-037-53	TRANSISTOR 2SA1832F-Y/GR(TPL3)	
Q003	8-729-037-53	TRANSISTOR 2SA1832F-Y/GR(TPL3)	
Q012	8-729-037-52	TRANSISTOR 2SC4738F-Y/GR(TPL3)	
Q017	8-729-037-52	TRANSISTOR 2SC4738F-Y/GR(TPL3)	
Q019	8-729-042-29	TRANSISTOR RN1104F(TPL3)	
Q020	8-729-037-52	TRANSISTOR 2SC4738F-Y/GR(TPL3)	
Q021	8-729-037-52	TRANSISTOR 2SC4738F-Y/GR(TPL3)	
Q023	8-729-037-52	TRANSISTOR 2SC4738F-Y/GR(TPL3)	
Q024	8-729-037-52	TRANSISTOR 2SC4738F-Y/GR(TPL3)	
Q025	8-729-037-89	TRANSISTOR 2SC4627J-C(K8).S0	
Q027	8-729-037-53	TRANSISTOR 2SA1832F-Y/GR(TPL3)	
Q028	8-729-042-29	TRANSISTOR RN1104F(TPL3)	
Q029	8-729-037-53	TRANSISTOR 2SA1832F-Y/GR(TPL3)	
Q030	8-729-037-53	TRANSISTOR 2SA1832F-Y/GR(TPL3)	
Q032	8-729-037-53	TRANSISTOR 2SA1832F-Y/GR(TPL3)	
Q033	8-729-047-19	TRANSISTOR 2SA1965-S-TL	
Q034	8-729-037-53	TRANSISTOR 2SA1832F-Y/GR(TPL3)	
Q036	8-729-037-89	TRANSISTOR 2SC4627J-C(K8).S0	
Q038	8-729-042-29	TRANSISTOR RN1104F(TPL3)	
Q039	8-729-037-52	TRANSISTOR 2SC4738F-Y/GR(TPL3)	
Q040	8-729-042-29	TRANSISTOR RN1104F(TPL3)	
Q041	8-729-230-72	TRANSISTOR 2SA1362-YG-EL	
Q042	8-729-042-29	TRANSISTOR RN1104F(TPL3)	
Q043	8-729-047-19	TRANSISTOR 2SA1965-S-TL	
Q044	8-729-042-29	TRANSISTOR RN1104F(TPL3)	
Q045	8-729-037-52	TRANSISTOR 2SC4738F-Y/GR(TPL3)	
Q151	8-729-037-61	TRANSISTOR RN2104F(TPL3)	
Q153	8-729-040-77	TRANSISTOR 2SC5376-B(TE85L)	
Q154	8-729-040-77	TRANSISTOR 2SC5376-B(TE85L)	
Q156	8-729-040-77	TRANSISTOR 2SC5376-B(TE85L)	
Q202	8-729-037-52	TRANSISTOR 2SC4738F-Y/GR(TPL3)	
Q203	8-729-037-53	TRANSISTOR 2SA1832F-Y/GR(TPL3)	
Q204	8-729-037-52	TRANSISTOR 2SC4738F-Y/GR(TPL3)	
Q205	8-729-042-29	TRANSISTOR RN1104F(TPL3)	
Q208	8-729-042-29	TRANSISTOR RN1104F(TPL3)	
Q213	8-729-037-52	TRANSISTOR 2SC4738F-Y/GR(TPL3)(TR950E)	
Q214	8-729-037-52	TRANSISTOR 2SC4738F-Y/GR(TPL3)(TR950E)	
Q216	8-729-037-52	TRANSISTOR 2SC4738F-Y/GR(TPL3)(TR950E)	
Q215	8-729-037-52	TRANSISTOR 2SC4738F-Y/GR(TPL3)(TR913E)	
Q217	8-729-037-53	TRANSISTOR 2SA1832F-Y/GR(TPL3)	
Q301	8-729-045-78	TRANSISTOR RN1110F(TPL3)	
Q302	8-729-045-78	TRANSISTOR RN1110F(TPL3)	
Q305	8-729-037-63	TRANSISTOR UN9115J-(K8).SO	
Q306	8-729-037-76	TRANSISTOR UN9215J-(K8).SO	
Q307	8-729-037-76	TRANSISTOR UN9215J-(K8).SO	
Q308	8-729-037-61	TRANSISTOR RN2104F(TPL3)	
Q309	8-729-042-29	TRANSISTOR RN1104F(TPL3)	
Q371	8-729-045-78	TRANSISTOR RN1110F(TPL3)	
Q372	8-729-045-78	TRANSISTOR RN1110F(TPL3)	

Ref. No.	Part No.	Description				Remarks
Q501	8-729-037-53	TRANSISTOR	2SA1832F-Y/GR(TPL3)			
Q551	8-729-037-53	TRANSISTOR	2SA1832F-Y/GR(TPL3)			
Q552	8-729-037-52	TRANSISTOR	2SC4738F-Y/GR(TPL3)			
Q553	8-729-037-52	TRANSISTOR	2SC4738F-Y/GR(TPL3)			
Q554	8-729-037-53	TRANSISTOR	2SA1832F-Y/GR(TPL3)			
Q607	8-729-041-43	TRANSISTOR	HN1L02FU(TE85R)			
Q609	8-729-037-52	TRANSISTOR	2SC4738F-Y/GR(TPL3)			
Q610	8-729-042-29	TRANSISTOR	RN1104F(TPL3)			
Q611	8-729-042-29	TRANSISTOR	RN1104F(TPL3)			
Q619	8-729-037-53	TRANSISTOR	2SA1832F-Y/GR(TPL3)			
Q620	8-729-042-58	TRANSISTOR	UN9111J-(K8).SO			
Q802	8-729-042-29	TRANSISTOR	RN1104F(TPL3)			
Q803	8-729-042-29	TRANSISTOR	RN1104F(TPL3)			
Q804	8-729-037-53	TRANSISTOR	2SA1832F-Y/GR(TPL3)			
Q805	8-729-037-53	TRANSISTOR	2SA1832F-Y/GR(TPL3)			
Q806	8-729-037-52	TRANSISTOR	2SC4738F-Y/GR(TPL3)			
		< RESISTOR >				
R003	1-216-804-11	METAL CHIP	39	5%	1/16W	
R004	1-216-818-11	METAL CHIP	560	5%	1/16W	
R005	1-216-809-11	METAL CHIP	100	5%	1/16W	
R006	1-216-825-11	METAL CHIP	2.2K	5%	1/16W	
R007	1-216-829-11	METAL CHIP	4.7K	5%	1/16W	
R008	1-216-814-11	METAL CHIP	270	5%	1/16W	
R009	1-216-813-11	METAL CHIP	220	5%	1/16W	
R014	1-216-837-11	METAL CHIP	22K	5%	1/16W	
R015	1-216-839-11	METAL CHIP	33K	5%	1/16W	
R020	1-216-837-11	METAL CHIP	22K	5%	1/16W	
R021	1-216-837-11	METAL CHIP	22K	5%	1/16W	
R023	1-216-822-11	METAL CHIP	1.2K	5%	1/16W	
R025	1-216-822-11	METAL CHIP	1.2K	5%	1/16W	
R027	1-216-816-11	METAL CHIP	390	5%	1/16W	
R029	1-216-837-11	METAL CHIP	22K	5%	1/16W	
R031	1-216-837-11	METAL CHIP	22K	5%	1/16W	
R032	1-216-816-11	METAL CHIP	390	5%	1/16W	
R034	1-216-864-11	METAL CHIP	0	5%	1/16W	
R035	1-216-841-11	METAL CHIP	47K	5%	1/16W	
R037	1-216-824-11	METAL CHIP	1.8K	5%	1/16W	
R038	1-216-841-11	METAL CHIP	47K	5%	1/16W	
R039	1-216-824-11	METAL CHIP	1.8K	5%	1/16W	
R040	1-216-864-11	METAL CHIP	0	5%	1/16W	
R043	1-216-833-11	METAL CHIP	10K	5%	1/16W	
R044	1-216-833-11	METAL CHIP	10K	5%	1/16W	
R045	1-216-845-11	METAL CHIP	100K	5%	1/16W	
R046	1-216-821-11	METAL CHIP	1K	5%	1/16W	
R047	1-216-864-11	METAL CHIP	0	5%	1/16W	
R048	1-216-864-11	METAL CHIP	0	5%	1/16W	
R049	1-216-833-11	METAL CHIP	10K	5%	1/16W	
R050	1-216-837-11	METAL CHIP	22K	5%	1/16W	
R051	1-216-825-11	METAL CHIP	2.2K	5%	1/16W	
R052	1-216-831-11	METAL CHIP	6.8K	5%	1/16W	
R053	1-216-833-11	METAL CHIP	10K	5%	1/16W	
R054	1-216-828-11	METAL CHIP	3.9K	5%	1/16W	
R055	1-216-833-11	METAL CHIP	10K	5%	1/16W	
R056	1-216-853-11	METAL CHIP	470K	5%	1/16W	
R057	1-216-864-11	METAL CHIP	0	5%	1/16W	
R058	1-216-853-11	METAL CHIP	470K	5%	1/16W	
R059	1-216-818-11	METAL CHIP	560	5%	1/16W	

Ref. No.	Part No.	Description			Remarks
R060	1-216-821-11	METAL CHIP	1K	5%	1/16W
R062	1-216-821-11	METAL CHIP	1K	5%	1/16W
R063	1-216-818-11	METAL CHIP	560	5%	1/16W
R066	1-216-823-11	METAL CHIP	1.5K	5%	1/16W
R067	1-216-817-11	METAL CHIP	470	5%	1/16W
R068	1-216-817-11	METAL CHIP	470	5%	1/16W
R069	1-216-864-11	METAL CHIP	0	5%	1/16W
R071	1-216-864-11	METAL CHIP	0	5%	1/16W
R072	1-216-864-11	METAL CHIP	0	5%	1/16W
R073	1-216-821-11	METAL CHIP	1K	5%	1/16W
R074	1-216-816-11	METAL CHIP	390	5%	1/16W
R075	1-216-817-11	METAL CHIP	470	5%	1/16W
R076	1-216-816-11	METAL CHIP	390	5%	1/16W
R078	1-216-817-11	METAL CHIP	470	5%	1/16W
R079	1-216-817-11	METAL CHIP	470	5%	1/16W
R080	1-216-821-11	METAL CHIP	1K	5%	1/16W
R081	1-216-826-11	METAL CHIP	2.7K	5%	1/16W
R082	1-216-822-11	METAL CHIP	1.2K	5%	1/16W
R083	1-216-864-11	METAL CHIP	0	5%	1/16W
R085	1-216-833-11	METAL CHIP	10K	5%	1/16W
R087	1-216-821-11	METAL CHIP	1K	5%	1/16W
R092	1-216-809-11	METAL CHIP	100	5%	1/16W
R093	1-216-833-11	METAL CHIP	10K	5%	1/16W
R094	1-216-814-11	METAL CHIP	270	5%	1/16W
R095	1-216-839-11	METAL CHIP	33K	5%	1/16W
R096	1-216-813-11	METAL CHIP	220	5%	1/16W
R098	1-216-817-11	METAL CHIP	470	5%	1/16W
R099	1-216-817-11	METAL CHIP	470	5%	1/16W
R101	1-216-837-11	METAL CHIP	22K	5%	1/16W
R102	1-216-834-11	METAL CHIP	12K	5%	1/16W
R103	1-216-816-11	METAL CHIP	390	5%	1/16W
R104	1-216-828-11	METAL CHIP	3.9K	5%	1/16W
R105	1-216-819-11	METAL CHIP	680	5%	1/16W
R106	1-216-823-11	METAL CHIP	1.5K	5%	1/16W
R107	1-216-833-11	METAL CHIP	10K	5%	1/16W
R109	1-216-829-11	METAL CHIP	4.7K	5%	1/16W
R110	1-216-829-11	METAL CHIP	4.7K	5%	1/16W
R112	1-216-833-11	METAL CHIP	10K	5%	1/16W
R113	1-216-825-11	METAL CHIP	2.2K	5%	1/16W
R152	1-216-822-11	METAL CHIP	1.2K	5%	1/16W
R154	1-216-822-11	METAL CHIP	1.2K	5%	1/16W
R157	1-216-822-11	METAL CHIP	1.2K	5%	1/16W
R161	1-216-804-11	METAL CHIP	39	5%	1/16W
R162	1-216-803-11	METAL CHIP	33	5%	1/16W
R165	1-216-803-11	METAL CHIP	33	5%	1/16W
R166	1-216-804-11	METAL CHIP	39	5%	1/16W
R167	1-216-803-11	METAL CHIP	33	5%	1/16W
R170	1-216-804-11	METAL CHIP	39	5%	1/16W
R175	1-216-836-11	METAL CHIP	18K	5%	1/16W
R177	1-216-821-11	METAL CHIP	1K	5%	1/16W
R178	1-216-821-11	METAL CHIP	1K	5%	1/16W
R179	1-216-815-11	METAL CHIP	330	5%	1/16W
R180	1-216-815-11	METAL CHIP	330	5%	1/16W
R183	1-218-876-11	RES,CHIP	16K	0.50%	1/16W
R184	1-218-847-11	RES,CHIP	1K	0.50%	1/16W

VC-214

Ref. No.	Part No.	Description			Remarks
R202	1-216-833-11	METAL CHIP	10K	5%	1/16W
R203	1-216-814-11	METAL CHIP	270	5%	1/16W
R205	1-216-835-11	METAL CHIP	15K	5%	1/16W
R206	1-216-827-11	METAL CHIP	3.3K	5%	1/16W
R208	1-216-827-11	METAL CHIP	3.3K	5%	1/16W
R210	1-216-809-11	METAL CHIP	100	5%	1/16W
R211	1-216-830-11	METAL CHIP	5.6K	5%	1/16W
R212	1-216-825-11	METAL CHIP	2.2K	5%	1/16W
R214	1-216-823-11	METAL CHIP	1.5K	5%	1/16W
R215	1-216-822-11	METAL CHIP	1.2K	5%	1/16W
R216	1-216-811-11	METAL CHIP	150	5%	1/16W
R217	1-216-864-11	METAL CHIP	0	5%	1/16W
R218	1-216-826-11	METAL CHIP	2.7K	5%	1/16W (TR950E)
R219	1-216-826-11	METAL CHIP	2.7K	5%	1/16W (TR913E)
R220	1-216-815-11	METAL CHIP	330	5%	1/16W (TR950E)
R222	1-216-826-11	METAL CHIP	2.7K	5%	1/16W (TR950E)
R223	1-216-821-11	METAL CHIP	1K	5%	1/16W
R224	1-216-831-11	METAL CHIP	6.8K	5%	1/16W
R225	1-216-826-11	METAL CHIP	2.7K	5%	1/16W (TR950E)
R226	1-216-820-11	METAL CHIP	820	5%	1/16W
R227	1-216-811-11	METAL CHIP	150	5%	1/16W
R228	1-216-813-11	METAL CHIP	220	5%	1/16W
R229	1-216-805-11	METAL CHIP	47	5%	1/16W
R230	1-216-811-11	METAL CHIP	150	5%	1/16W
R231	1-216-812-11	METAL CHIP	180	5%	1/16W
R232	1-216-815-11	METAL CHIP	330	5%	1/16W (TR950E)
R233	1-216-824-11	METAL CHIP	1.8K	5%	1/16W
R234	1-216-832-11	METAL CHIP	8.2K	5%	1/16W
R236	1-216-825-11	METAL CHIP	2.2K	5%	1/16W
R237	1-216-825-11	METAL CHIP	2.2K	5%	1/16W
R238	1-216-832-11	METAL CHIP	8.2K	5%	1/16W
R239	1-216-827-11	METAL CHIP	3.3K	5%	1/16W
R240	1-216-857-11	METAL CHIP	1M	5%	1/16W
R241	1-216-828-11	METAL CHIP	3.9K	5%	1/16W
R242	1-216-845-11	METAL CHIP	100K	5%	1/16W
R243	1-216-845-11	METAL CHIP	100K	5%	1/16W
R244	1-216-845-11	METAL CHIP	100K	5%	1/16W
R245	1-216-840-11	METAL CHIP	39K	5%	1/16W
R246	1-216-835-11	METAL CHIP	15K	5%	1/16W
R247	1-216-817-11	METAL CHIP	470	5%	1/16W
R248	1-216-822-11	METAL CHIP	1.2K	5%	1/16W
R249	1-216-833-11	METAL CHIP	10K	5%	1/16W
R250	1-216-864-11	METAL CHIP	0	5%	1/16W
R251	1-216-833-11	METAL CHIP	10K	5%	1/16W
R252	1-216-821-11	METAL CHIP	1K	5%	1/16W
R253	1-216-845-11	METAL CHIP	100K	5%	1/16W
R255	1-216-833-11	METAL CHIP	10K	5%	1/16W
R257	1-216-295-91	SHORT	0		
R302	1-216-817-11	METAL CHIP	470	5%	1/16W
R303	1-216-817-11	METAL CHIP	470	5%	1/16W
R304	1-216-817-11	METAL CHIP	470	5%	1/16W
R305	1-216-817-11	METAL CHIP	470	5%	1/16W
R311	1-216-841-11	METAL CHIP	47K	5%	1/16W
R314	1-216-823-11	METAL CHIP	1.5K	5%	1/16W
R315	1-216-823-11	METAL CHIP	1.5K	5%	1/16W
R316	1-216-841-11	METAL CHIP	47K	5%	1/16W
R317	1-216-847-11	METAL CHIP	150K	5%	1/16W
R318	1-216-853-11	METAL CHIP	470K	5%	1/16W
R319	1-216-853-11	METAL CHIP	470K	5%	1/16W
R320	1-216-845-11	METAL CHIP	100K	5%	1/16W
R321	1-216-864-11	METAL CHIP	0	5%	1/16W
R322	1-216-845-11	METAL CHIP	100K	5%	1/16W
R325	1-218-895-11	RES,CHIP	100K	0.50%	1/16W
R331	1-216-820-11	METAL CHIP	820	5%	1/16W
R350	1-216-864-11	METAL CHIP	0	5%	1/16W
R373	1-216-809-11	METAL CHIP	100	5%	1/16W
R374	1-216-809-11	METAL CHIP	100	5%	1/16W
R388	1-216-864-11	METAL CHIP	0	5%	1/16W
R389	1-216-864-11	METAL CHIP	0	5%	1/16W
R402	1-216-821-11	METAL CHIP	1K	5%	1/16W
R403	1-216-845-11	METAL CHIP	100K	5%	1/16W
R405	1-216-845-11	METAL CHIP	100K	5%	1/16W
R406	1-216-845-11	METAL CHIP	100K	5%	1/16W
R407	1-216-845-11	METAL CHIP	100K	5%	1/16W
R408	1-216-854-11	METAL CHIP	560K	5%	1/16W
R409	1-216-845-11	METAL CHIP	100K	5%	1/16W
R410	1-216-829-11	METAL CHIP	4.7K	5%	1/16W
R412	1-216-829-11	METAL CHIP	4.7K	5%	1/16W
R414	1-216-829-11	METAL CHIP	4.7K	5%	1/16W
R415	1-216-821-11	METAL CHIP	1K	5%	1/16W
R416	1-216-864-11	METAL CHIP	0	5%	1/16W
R419	1-216-839-11	METAL CHIP	33K	5%	1/16W
R420	1-216-833-11	METAL CHIP	10K	5%	1/16W
R421	1-216-833-11	METAL CHIP	10K	5%	1/16W
R424	1-216-841-11	METAL CHIP	47K	5%	1/16W
R426	1-216-825-11	METAL CHIP	2.2K	5%	1/16W
R427	1-216-841-11	METAL CHIP	47K	5%	1/16W
R428	1-216-841-11	METAL CHIP	47K	5%	1/16W
R429	1-216-811-11	METAL CHIP	150	5%	1/16W
R430	1-216-813-11	METAL CHIP	220	5%	1/16W
R431	1-216-825-11	METAL CHIP	2.2K	5%	1/16W
R432	1-216-845-11	METAL CHIP	100K	5%	1/16W
R433	1-216-845-11	METAL CHIP	100K	5%	1/16W
R434	1-216-853-11	METAL CHIP	470K	5%	1/16W
R435	1-216-853-11	METAL CHIP	470K	5%	1/16W
R436	1-216-845-11	METAL CHIP	100K	5%	1/16W
R437	1-216-845-11	METAL CHIP	100K	5%	1/16W
R440	1-216-841-11	METAL CHIP	47K	5%	1/16W
R441	1-216-845-11	METAL CHIP	100K	5%	1/16W
R502	1-216-864-11	METAL CHIP	0	5%	1/16W
R503	1-216-864-11	METAL CHIP	0	5%	1/16W
R504	1-216-845-11	METAL CHIP	100K	5%	1/16W
R508	1-216-809-11	METAL CHIP	100	5%	1/16W
R510	1-216-809-11	METAL CHIP	100	5%	1/16W
R512	1-216-853-11	METAL CHIP	470K	5%	1/16W

Ref. No.	Part No.	Description			Remarks	Ref. No.	Part No.	Description			Remarks
R513	1-216-825-11	METAL CHIP	2.2K	5%	1/16W	R633	1-218-903-11	RES,CHIP	220K	0.50%	1/16W
R514	1-216-821-11	METAL CHIP	1K	5%	1/16W	R634	1-218-903-11	RES,CHIP	220K	0.50%	1/16W
R515	1-216-864-11	METAL CHIP	0	5%	1/16W	R635	1-218-911-11	RES,CHIP	470K	0.50%	1/16W
R522	1-216-864-11	METAL CHIP	0	5%	1/16W	R636	1-218-911-11	RES,CHIP	470K	0.50%	1/16W
R525	1-216-864-11	METAL CHIP	0	5%	1/16W	R637	1-216-845-11	METAL CHIP	100K	5%	1/16W
R526	1-216-864-11	METAL CHIP	0	5%	1/16W	R638	1-216-845-11	METAL CHIP	100K	5%	1/16W
R527	1-216-864-11	METAL CHIP	0	5%	1/16W	R639	1-216-845-11	METAL CHIP	100K	5%	1/16W
R530	1-216-857-11	METAL CHIP	1M	5%	1/16W	R640	1-216-845-11	METAL CHIP	100K	5%	1/16W
R532	1-216-864-11	METAL CHIP	0	5%	1/16W	R641	1-216-845-11	METAL CHIP	100K	5%	1/16W
R551	1-216-841-11	METAL CHIP	47K	5%	1/16W	R642	1-216-821-11	METAL CHIP	1K	5%	1/16W
R554	1-216-843-11	METAL CHIP	68K	5%	1/16W	R643	1-216-857-11	METAL CHIP	1M	5%	1/16W
R555	1-216-829-11	METAL CHIP	4.7K	5%	1/16W	R644	1-216-841-11	METAL CHIP	47K	5%	1/16W
R556	1-216-797-11	METAL CHIP	10	5%	1/16W	R645	1-216-845-11	METAL CHIP	100K	5%	1/16W
R557	1-216-843-11	METAL CHIP	68K	5%	1/16W	R646	1-216-853-11	METAL CHIP	470K	5%	1/16W
R558	1-216-295-91	SHORT	0			R647	1-216-853-11	METAL CHIP	470K	5%	1/16W
R560	1-216-821-11	METAL CHIP	1K	5%	1/16W	R648	1-216-853-11	METAL CHIP	470K	5%	1/16W
R561	1-216-853-11	METAL CHIP	470K	5%	1/16W	R649	1-216-857-11	METAL CHIP	1M	5%	1/16W
R562	1-216-849-11	METAL CHIP	220K	5%	1/16W	R650	1-219-570-11	RES,CHIP	10M	5%	1/16W
R563	1-216-853-11	METAL CHIP	470K	5%	1/16W	R651	1-216-845-11	METAL CHIP	100K	5%	1/16W
R564	1-216-853-11	METAL CHIP	470K	5%	1/16W	R652	1-216-853-11	METAL CHIP	470K	5%	1/16W
R565	1-216-833-11	METAL CHIP	10K	5%	1/16W	R653	1-216-853-11	METAL CHIP	470K	5%	1/16W
R566	1-216-835-11	METAL CHIP	15K	5%	1/16W	R654	1-216-817-11	METAL CHIP	470	5%	1/16W
R567	1-216-825-11	METAL CHIP	2.2K	5%	1/16W	R655	1-216-853-11	METAL CHIP	470K	5%	1/16W
R568	1-216-857-11	METAL CHIP	1M	5%	1/16W	R662	1-216-841-11	METAL CHIP	47K	5%	1/16W
R569	1-216-825-11	METAL CHIP	2.2K	5%	1/16W	R663	1-216-853-11	METAL CHIP	470K	5%	1/16W
R570	1-216-841-11	METAL CHIP	47K	5%	1/16W	R665	1-216-853-11	METAL CHIP	470K	5%	1/16W
R571	1-216-837-11	METAL CHIP	22K	5%	1/16W	R666	1-216-821-11	METAL CHIP	1K	5%	1/16W
R572	1-216-837-11	METAL CHIP	22K	5%	1/16W	R667	1-216-821-11	METAL CHIP	1K	5%	1/16W
R573	1-216-815-11	METAL CHIP	330	5%	1/16W	R668	1-216-821-11	METAL CHIP	1K	5%	1/16W
R574	1-216-821-11	METAL CHIP	1K	5%	1/16W	R669	1-216-821-11	METAL CHIP	1K	5%	1/16W
R575	1-216-821-11	METAL CHIP	1K	5%	1/16W	R670	1-216-821-11	METAL CHIP	1K	5%	1/16W
R576	1-216-821-11	METAL CHIP	1K	5%	1/16W	R671	1-216-821-11	METAL CHIP	1K	5%	1/16W
R577	1-216-833-11	METAL CHIP	10K	5%	1/16W	R672	1-216-821-11	METAL CHIP	1K	5%	1/16W
R579	1-216-821-11	METAL CHIP	1K	5%	1/16W	R673	1-216-821-11	METAL CHIP	1K	5%	1/16W
R583	1-216-829-11	METAL CHIP	4.7K	5%	1/16W	R675	1-216-821-11	METAL CHIP	1K	5%	1/16W
R603	1-216-845-11	METAL CHIP	100K	5%	1/16W	R676	1-216-821-11	METAL CHIP	1K	5%	1/16W
R604	1-216-813-11	METAL CHIP	220	5%	1/16W	R677	1-216-821-11	METAL CHIP	1K	5%	1/16W
R606	1-216-829-11	METAL CHIP	4.7K	5%	1/16W	R678	1-216-821-11	METAL CHIP	1K	5%	1/16W
R608	1-216-845-11	METAL CHIP	100K	5%	1/16W	R679	1-216-821-11	METAL CHIP	1K	5%	1/16W
R611	1-216-825-11	METAL CHIP	2.2K	5%	1/16W	R680	1-216-845-11	METAL CHIP	100K	5%	1/16W
R612	1-216-853-11	METAL CHIP	470K	5%	1/16W	R681	1-216-821-11	METAL CHIP	1K	5%	1/16W
R614	1-216-821-11	METAL CHIP	1K	5%	1/16W	R682	1-216-821-11	METAL CHIP	1K	5%	1/16W
R618	1-216-853-11	METAL CHIP	470K	5%	1/16W	R683	1-216-821-11	METAL CHIP	1K	5%	1/16W
R619	1-216-853-11	METAL CHIP	470K	5%	1/16W	R684	1-216-821-11	METAL CHIP	1K	5%	1/16W
R620	1-216-853-11	METAL CHIP	470K	5%	1/16W	R685	1-216-821-11	METAL CHIP	1K	5%	1/16W
R621	1-216-853-11	METAL CHIP	470K	5%	1/16W	R686	1-216-821-11	METAL CHIP	1K	5%	1/16W
R622	1-216-853-11	METAL CHIP	470K	5%	1/16W	R687	1-216-821-11	METAL CHIP	1K	5%	1/16W
R624	1-216-853-11	METAL CHIP	470K	5%	1/16W	R690	1-216-821-11	METAL CHIP	1K	5%	1/16W
R625	1-216-845-11	METAL CHIP	100K	5%	1/16W	R691	1-216-845-11	METAL CHIP	100K	5%	1/16W
R627	1-216-853-11	METAL CHIP	470K	5%	1/16W	R692	1-216-853-11	METAL CHIP	470K	5%	1/16W
R628	1-216-841-11	METAL CHIP	47K	5%	1/16W	R693	1-216-821-11	METAL CHIP	1K	5%	1/16W
R629	1-216-833-11	METAL CHIP	10K	5%	1/16W	R695	1-216-827-11	METAL CHIP	3.3K	5%	1/16W
R630	1-216-826-11	METAL CHIP	2.7K	5%	1/16W	R697	1-216-854-11	METAL CHIP	560K	5%	1/16W
R631	1-216-845-11	METAL CHIP	100K	5%	1/16W	R698	1-216-853-11	METAL CHIP	470K	5%	1/16W
R632	1-216-857-11	METAL CHIP	1M	5%	1/16W	R699	1-216-821-11	METAL CHIP	1K	5%	1/16W

Ref. No.	Part No.	Description			Remarks
R700	1-216-853-11	METAL CHIP	470K	5%	1/16W
R726	1-216-864-11	METAL CHIP	0	5%	1/16W
R752	1-216-841-11	METAL CHIP	47K	5%	1/16W
R753	1-216-841-11	METAL CHIP	47K	5%	1/16W
R755	1-216-837-11	METAL CHIP	22K	5%	1/16W
R756	1-216-829-11	METAL CHIP	4.7K	5%	1/16W
R757	1-216-829-11	METAL CHIP	4.7K	5%	1/16W
R758	1-216-833-11	METAL CHIP	10K	5%	1/16W
R759	1-216-833-11	METAL CHIP	10K	5%	1/16W
R760	1-216-835-11	METAL CHIP	15K	5%	1/16W
R761	1-216-857-11	METAL CHIP	1M	5%	1/16W
R763	1-218-879-11	RES,CHIP	22K	0.50%	1/16W
R764	1-216-815-11	METAL CHIP	330	5%	1/16W
R765	1-216-821-11	METAL CHIP	1K	5%	1/16W
R766	1-216-864-11	METAL CHIP	0	5%	1/16W
R767	1-216-817-11	METAL CHIP	470	5%	1/16W
R768	1-216-847-11	METAL CHIP	150K	5%	1/16W
R770	1-216-847-11	METAL CHIP	150K	5%	1/16W
R771	1-216-818-11	METAL CHIP	560	5%	1/16W
R772	1-216-831-11	METAL CHIP	6.8K	5%	1/16W
R773	1-216-817-11	METAL CHIP	470	5%	1/16W
R774	1-216-840-11	METAL CHIP	39K	5%	1/16W
R777	1-216-864-11	METAL CHIP	0	5%	1/16W
R801	1-217-671-11	METAL CHIP	1	5%	1/10W
R802	1-217-671-11	METAL CHIP	1	5%	1/10W
R803	1-217-671-11	METAL CHIP	1	5%	1/10W
R804	1-216-833-11	METAL CHIP	10K	5%	1/16W
R805	1-216-833-11	METAL CHIP	10K	5%	1/16W
R806	1-216-833-11	METAL CHIP	10K	5%	1/16W
R807	1-216-808-11	METAL CHIP	82	5%	1/16W
R808	1-216-864-11	METAL CHIP	0	5%	1/16W
R809	1-216-864-11	METAL CHIP	0	5%	1/16W
R810	1-216-853-11	METAL CHIP	470K	5%	1/16W
R811	1-216-853-11	METAL CHIP	470K	5%	1/16W
R812	1-216-853-11	METAL CHIP	470K	5%	1/16W
R813	1-216-851-11	METAL CHIP	330K	5%	1/16W
R814	1-216-845-11	METAL CHIP	100K	5%	1/16W
R815	1-216-841-11	METAL CHIP	47K	5%	1/16W
R816	1-216-833-11	METAL CHIP	10K	5%	1/16W
R817	1-216-833-11	METAL CHIP	10K	5%	1/16W
R818	1-216-841-11	METAL CHIP	47K	5%	1/16W
R819	1-216-829-11	METAL CHIP	4.7K	5%	1/16W
R820	1-216-833-11	METAL CHIP	10K	5%	1/16W
R821	1-216-837-11	METAL CHIP	22K	5%	1/16W
R822	1-216-841-11	METAL CHIP	47K	5%	1/16W
R823	1-216-817-11	METAL CHIP	470	5%	1/16W
R824	1-216-838-11	METAL CHIP	27K	5%	1/16W
R825	1-216-817-11	METAL CHIP	470	5%	1/16W
R826	1-216-864-11	METAL CHIP	0	5%	1/16W
R827	1-216-833-11	METAL CHIP	10K	5%	1/16W
R828	1-216-833-11	METAL CHIP	10K	5%	1/16W
R829	1-216-864-11	METAL CHIP	0	5%	1/16W
R830	1-216-832-11	METAL CHIP	8.2K	5%	1/16W
R831	1-216-836-11	METAL CHIP	18K	5%	1/16W
R832	1-217-671-11	METAL CHIP	1	5%	1/10W

Ref. No.	Part No.	Description			Remarks
R833	1-217-671-11	METAL CHIP	1	5%	1/10W
R834	1-216-845-11	METAL CHIP	100K	5%	1/16W
R835	1-216-827-11	METAL CHIP	3.3K	5%	1/16W
R836	1-216-829-11	METAL CHIP	4.7K	5%	1/16W
R837	1-216-023-00	METAL CHIP	82	5%	1/10W
R916	1-216-864-11	METAL CHIP	0	5%	1/16W
R917	1-216-833-11	METAL CHIP	10K	5%	1/16W
R918	1-216-845-11	METAL CHIP	100K	5%	1/16W
R919	1-216-833-11	METAL CHIP	10K	5%	1/16W (TR913E)
R919	1-216-841-11	METAL CHIP	47K	5%	1/16W (TR950E)
R920	1-216-845-11	METAL CHIP	100K	5%	1/16W
R921	1-216-845-11	METAL CHIP	100K	5%	1/16W
R922	1-217-671-11	METAL CHIP	1	5%	1/10W
R923	1-217-671-11	METAL CHIP	1	5%	1/10W
R924	1-216-821-11	METAL CHIP	1K	5%	1/16W
R925	1-216-821-11	METAL CHIP	1K	5%	1/16W
R927	1-216-864-11	METAL CHIP	0	5%	1/16W
R928	1-216-821-11	METAL CHIP	1K	5%	1/16W
R929	1-216-864-11	METAL CHIP	0	5%	1/16W
		< VIBRATOR >			
X401	1-760-655-41	VIBRATOR, CRYSTAL (20MHz)			
X501	1-760-321-11	VIBRATOR, CRYSTAL (28.375MHz)			
X601	1-767-450-11	VIBRATOR, CERAMIC (20MHz)			
X602	1-760-458-21	VIBRATOR, CRYSTAL (32.768kHz)			
	A-7073-876-A	VF-126 BOARD, COMPLETE (TR950E)			
		**********			
		(Ref.No.:20000 Series)			
		< CAPACITOR >			
C4502	1-135-259-11	TANTAL. CHIP	10uF	20%	6.3V
C4503	1-162-970-11	CERAMIC CHIP	0.01uF	10%	25V
C4504	1-135-149-21	TANTALUM CHIP	2.2uF	20%	10V
C4505	1-162-970-11	CERAMIC CHIP	0.01uF	10%	25V
C4506	1-162-970-11	CERAMIC CHIP	0.01uF	10%	25V
C4507	1-162-970-11	CERAMIC CHIP	0.01uF	10%	25V
C4508	1-115-566-11	CERAMIC CHIP	4.7uF	10%	10V
C4509	1-135-181-21	TANTALUM CHIP	4.7uF	20%	6.3V
C4510	1-135-181-21	TANTALUM CHIP	4.7uF	20%	6.3V
C4511	1-135-181-21	TANTALUM CHIP	4.7uF	20%	6.3V
C4512	1-162-970-11	CERAMIC CHIP	0.01uF	10%	25V
C4513	1-162-970-11	CERAMIC CHIP	0.01uF	10%	25V
C4514	1-107-686-11	TANTAL. CHIP	4.7uF	20%	16V
C4515	1-162-970-11	CERAMIC CHIP	0.01uF	10%	25V
C4516	1-164-505-11	CERAMIC CHIP	2.2uF		16V
C4601	1-162-970-11	CERAMIC CHIP	0.01uF	10%	25V
C4602	1-115-467-11	CERAMIC CHIP	0.22uF	10%	10V
C4603	1-115-566-11	CERAMIC CHIP	4.7uF	10%	10V
C4604	1-162-967-11	CERAMIC CHIP	0.0033uF	10%	50V
C4605	1-164-217-11	CERAMIC CHIP	150PF	5%	50V
C4606	1-162-970-11	CERAMIC CHIP	0.01uF	10%	25V
C4607	1-104-851-11	TANTAL. CHIP	10uF	20%	10V
C4608	1-164-357-11	CERAMIC CHIP	1000PF	5%	50V
C4609	1-162-927-11	CERAMIC CHIP	100PF	5%	50V
C4610	1-135-259-11	TANTAL. CHIP	10uF	20%	6.3V

Ref. No.	Part No.	Description			Remarks
C4611	1-162-970-11	CERAMIC CHIP	0.01uF	10%	25V
C4612	1-107-826-91	CERAMIC CHIP	0.1uF	10%	16V
C4613	1-104-916-11	TANTAL. CHIP	6.8uF	20%	20V
C4614	1-164-676-11	CERAMIC CHIP	2200PF	5%	16V
C4615	1-107-826-91	CERAMIC CHIP	0.1uF	10%	16V
C4617	1-164-227-11	CERAMIC CHIP	0.022uF	10%	25V
C4618	1-135-181-21	TANTALUM CHIP	4.7uF	20%	6.3V
C4619	1-164-227-11	CERAMIC CHIP	0.022uF	10%	25V
C4620	1-162-970-11	CERAMIC CHIP	0.01uF	10%	25V
C4621	1-165-112-11	CERAMIC CHIP	0.33uF		16V
C4622	1-162-970-11	CERAMIC CHIP	0.01uF	10%	25V
C4623	1-109-982-11	CERAMIC CHIP	1uF	10%	10V
C4626	1-107-682-11	CERAMIC CHIP	1uF	10%	16V
C4801	1-162-970-11	CERAMIC CHIP	0.01uF	10%	25V
C4802	1-113-642-11	TANTAL. CHIP	47uF	20%	10V
C4803	1-115-566-11	CERAMIC CHIP	4.7uF	10%	10V
⚠C4804	1-115-464-91	CERAMIC CHIP	0.0022uF	10%	630V
		< CONNECTOR >			
CN4501	1-766-350-21	CONNECTOR, FFC/FPC 20P			
CN4602	1-691-354-21	CONNECTOR, FFC/FPC (ZIF) 16P			
		< DIODE >			
D4601	8-713-102-80	DIODE 1T369-01-T8A			
D4602	8-719-043-70	DIODE MA6S121-(TX)			
⚠D4802	8-719-056-49	DIODE 1SS370(TE85L)			
		< IC >			
IC4501	8-759-546-65	IC CXA8115AR-T4			
IC4502	8-759-364-05	IC M62376GP-65AD			
IC4601	8-759-097-75	IC MB3789PFV-G-BND-ER			
IC4602	8-752-392-33	IC CXD2458AR-T4			
IC4603	8-759-580-26	IC NJM2130F(TE2)			
		< COIL >			
L4501	1-414-754-11	INDUCTOR 10uH			
L4502	1-414-756-11	INDUCTOR 47uH			
L4601	1-414-756-11	INDUCTOR 47uH			
L4602	1-414-756-11	INDUCTOR 47uH			
L4603	1-412-949-21	INDUCTOR 6.8uH			
L4801	1-412-031-11	INDUCTOR CHIP 47uH			
L4802	1-412-029-11	INDUCTOR CHIP 10uH			
		< FLUORECENT INDICATOR >			
⚠ND4801	1-517-414-71	FLUORESCENT TUBE (0.55 INCH)			
		< TRANSISTOR >			
Q4601	8-729-037-74	TRANSISTOR UN9213J-(K8).SO			
Q4602	8-729-037-61	TRANSISTOR RN2104F(TPL3)			
Q4603	8-729-045-84	TRANSISTOR RN2105F(TPL3)			
⚠Q4801	8-729-039-24	TRANSISTOR FX216-TL1			
		< RESISTOR >			
R4501	1-216-864-11	METAL CHIP	0	5%	1/16W
R4503	1-216-837-11	METAL CHIP	22K	5%	1/16W
R4504	1-216-837-11	METAL CHIP	22K	5%	1/16W
R4505	1-216-839-11	METAL CHIP	33K	5%	1/16W
R4509	1-216-843-11	METAL CHIP	68K	5%	1/16W

Ref. No.	Part No.	Description			Remarks
R4510	1-216-839-11	METAL CHIP	33K	5%	1/16W
R4511	1-216-840-11	METAL CHIP	39K	5%	1/16W
R4512	1-216-853-11	METAL CHIP	470K	5%	1/16W
R4513	1-216-840-11	METAL CHIP	39K	5%	1/16W
R4514	1-216-843-11	METAL CHIP	68K	5%	1/16W
R4515	1-216-839-11	METAL CHIP	33K	5%	1/16W
R4516	1-216-841-11	METAL CHIP	47K	5%	1/16W
R4517	1-216-840-11	METAL CHIP	39K	5%	1/16W
R4518	1-216-809-11	METAL CHIP	100	5%	1/16W
R4519	1-216-809-11	METAL CHIP	100	5%	1/16W
R4521	1-216-809-11	METAL CHIP	100	5%	1/16W
R4524	1-218-907-11	RES,CHIP	330K	0.50%	1/16W
R4525	1-218-877-11	RES,CHIP	18K	0.50%	1/16W
R4602	1-216-840-11	METAL CHIP	39K	5%	1/16W
R4604	1-216-835-11	METAL CHIP	15K	5%	1/16W
R4605	1-216-833-11	METAL CHIP	10K	5%	1/16W
R4606	1-218-901-11	RES,CHIP	180K	0.50%	1/16W
R4607	1-216-839-11	METAL CHIP	33K	5%	1/16W
R4608	1-216-822-11	METAL CHIP	1.2K	5%	1/16W
R4609	1-216-864-11	METAL CHIP	0	5%	1/16W
R4610	1-216-821-11	METAL CHIP	1K	5%	1/16W
R4611	1-216-843-11	METAL CHIP	68K	5%	1/16W
R4612	1-216-842-11	METAL CHIP	56K	5%	1/16W
R4615	1-216-864-11	METAL CHIP	0	5%	1/16W
R4616	1-218-887-11	RES,CHIP	47K	0.50%	1/16W
R4617	1-216-843-11	METAL CHIP	68K	5%	1/16W
R4618	1-216-850-11	METAL CHIP	270K	5%	1/16W
R4619	1-216-864-11	METAL CHIP	0	5%	1/16W
R4620	1-216-838-11	METAL CHIP	27K	5%	1/16W
R4621	1-216-833-11	METAL CHIP	10K	5%	1/16W
R4622	1-216-847-11	METAL CHIP	150K	5%	1/16W
R4623	1-216-841-11	METAL CHIP	47K	5%	1/16W
R4624	1-216-848-11	METAL CHIP	180K	5%	1/16W
R4625	1-216-840-11	METAL CHIP	39K	5%	1/16W
R4626	1-216-851-11	METAL CHIP	330K	5%	1/16W
R4627	1-216-850-11	METAL CHIP	270K	5%	1/16W
R4629	1-216-837-11	METAL CHIP	22K	5%	1/16W
R4630	1-216-853-11	METAL CHIP	470K	5%	1/16W
R4634	1-216-809-11	METAL CHIP	100	5%	1/16W
R4635	1-216-841-11	METAL CHIP	47K	5%	1/16W
R4636	1-216-845-11	METAL CHIP	100K	5%	1/16W
R4637	1-216-845-11	METAL CHIP	100K	5%	1/16W
R4801	1-216-839-11	METAL CHIP	33K	5%	1/16W
		< TRANSFORMER >			
⚠T4801	1-426-848-51	TRANSFORMER, INVERTER			

	A-7073-855-A	VF-129 BOARD, COMPLETE (TR913E)			
		**********			
		(Ref.No.:3000 Series)			
		< CAPACITOR >			
C901	1-107-854-11	TANTAL. CHIP	68uF	20%	6.3V
C902	1-163-038-91	CERAMIC CHIP	0.1uF		25V
C903	1-135-145-11	TANTALUM CHIP	0.47uF	10%	35V
C904	1-162-965-11	CERAMIC CHIP	0.0015uF	10%	50V
C905	1-104-752-11	TANTAL. CHIP	33uF	20%	6.3V

Note : The components identified by mark ⚠ or dotted line with mark ⚠ are critical for safety.
Replace only with part number specified.

Ref. No.	Part No.	Description			Remarks
C906	1-162-638-11	CERAMIC CHIP	1uF		16V
C907	1-104-563-11	FILM CHIP	0.1uF	5%	16V
C908	1-162-920-11	CERAMIC CHIP	27PF	5%	50V
C909	1-163-009-11	CERAMIC CHIP	0.001uF	10%	50V
⚠C910	1-162-625-11	CERAMIC CHIP	0.0047uF	5%	50V
⚠C911	1-164-715-11	CERAMIC CHIP	0.0068uF	5%	50V
C912	1-107-854-11	TANTAL. CHIP	68uF	20%	6.3V
C913	1-135-145-11	TANTALUM CHIP	0.47uF	10%	35V
C914	1-113-984-11	TANTAL. CHIP	1.5uF	20%	35V
C915	1-163-037-11	CERAMIC CHIP	0.022uF	10%	25V
C916	1-164-611-11	CERAMIC CHIP	0.001uF	10%	500V
		< CONNECTOR >			
CN901	1-573-506-41	CONNECTOR, FPC (NON ZIF) 4P			
* CN902	1-580-057-11	PIN, CONNECTOR (SMD) 4P			
		< DIODE >			
D901	8-719-951-21	DIODE PR1102W-TR			
D903	8-719-073-01	DIODE MA111-(K8).S0			
		< IC >			
IC901	8-759-196-14	IC BA7149F-E2			
		< COIL >			
L901	1-412-031-11	INDUCTOR CHIP 47uH			
L902	1-410-387-11	INDUCTOR CHIP 33uH			
⚠L903	1-411-697-11	COIL, FERRITE (HLC)			
		< TRANSISTOR >			
Q901	8-729-230-63	TRANSISTOR 2SD1819A-QRS-TX			
Q902	8-729-106-68	TRANSISTOR 2SD1615-T1GLGK			
Q903	8-729-216-31	TRANSISTOR 2SA1163G-TE85L			
Q904	8-729-230-63	TRANSISTOR 2SD1819A-QRS-TX			
		< RESISTOR >			
R901	1-216-817-11	METAL CHIP	470	5%	1/16W
R902	1-216-817-11	METAL CHIP	470	5%	1/16W
R903	1-216-057-00	METAL CHIP	2.2K	5%	1/10W
R904	1-216-833-11	METAL CHIP	10K	5%	1/16W
R905	1-216-822-11	METAL CHIP	1.2K	5%	1/16W
R906	1-216-823-11	METAL CHIP	1.5K	5%	1/16W
R907	1-216-845-11	METAL CHIP	100K	5%	1/16W
R908	1-216-852-11	METAL CHIP	390K	5%	1/16W
R909	1-216-833-11	METAL CHIP	10K	5%	1/16W
R910	1-216-835-11	METAL CHIP	15K	5%	1/16W
R911	1-216-160-00	RES,CHIP	27	5%	1/8W
R912	1-216-857-11	METAL CHIP	1M	5%	1/16W
R916	1-218-881-11	RES,CHIP	27K	0.50%	1/16W
R917	1-218-893-11	RES,CHIP	82K	0.50%	1/16W
R918	1-216-829-11	METAL CHIP	4.7K	5%	1/16W
R919	1-216-843-11	METAL CHIP	68K	5%	1/16W
R920	1-216-837-11	METAL CHIP	22K	5%	1/16W
R921	1-216-795-11	RES,CHIP	6.8	5%	1/16W
R922	1-216-850-11	METAL CHIP	270K	5%	1/16W
R923	1-216-857-11	METAL CHIP	1M	5%	1/16W

Ref. No.	Part No.	Description			Remarks
R924	1-216-862-11	RES,CHIP	2.7M	5%	1/16W
R925	1-216-862-11	RES,CHIP	2.7M	5%	1/16W
R926	1-216-821-11	METAL CHIP	1K	5%	1/16W
R927	1-216-821-11	METAL CHIP	1K	5%	1/16W
R928	1-216-827-11	METAL CHIP	3.3K	5%	1/16W
R929	1-216-818-11	METAL CHIP	560	5%	1/16W
R930	1-216-791-11	METAL CHIP	3.3	5%	1/16W
R931	1-217-671-11	METAL CHIP	1	5%	1/10W
R932	1-216-829-11	METAL CHIP	4.7K	5%	1/16W
		< VARIABLE RESISTOR >			
RV903	1-238-852-11	RES, ADJ, CERMET 470			
RV904	1-238-861-11	RES, ADJ, CERMET 470K			
		< TRANSFORMER >			
⚠T901	1-453-124-11	TRANSFORMER ASSY, FLYBACK			
		< FLAT CABLE >			
⚠W901	1-540-019-21	SOCKET ASSY, CRT			
	A-7073-882-A	VL-25 BOARD, COMPLETE			
		**********			
		(Ref.No.:1000 Series)			
		< CAPACITOR >			
C151	1-115-566-11	CERAMIC CHIP	4.7uF	10%	10V
C153	1-162-964-11	CERAMIC CHIP	0.001uF	10%	50V
		< CONNECTOR >			
CN151	1-766-644-21	CONNECTOR, FFC/FPC 8P			
CN151	1-774-633-11	CONNECTOR, FFC/FPC 8P			
		< DIODE >			
D151	8-719-073-01	DIODE MA111-(K8).S0			
		< COIL >			
L151	1-416-344-11	INDUCTOR 10uH			
		< TRANSISTOR >			
Q151	8-729-043-94	TRANSISTOR CPH3106-PM-TL			
Q152	8-729-028-26	TRANSISTOR 2SK1829(TE85L)			
		< RESISTOR >			
R151	1-216-864-11	METAL CHIP	0	5%	1/16W
R152	1-216-813-11	METAL CHIP	220	5%	1/16W
R153	1-216-821-11	METAL CHIP	1K	5%	1/16W
R154	1-216-845-11	METAL CHIP	100K	5%	1/16W

Note : The components identified by mark ⚠ or dotted line with mark ⚠ are critical for safety.
Replace only with part number specified.

Ref. No.	Part No.	Description	Remarks
		MISCELLANEOUS	
		**********	
1	1-517-857-11	LIGHT, VIDEO	
15	1-694-384-11	TERMINAL BOARD, BATTERY	
23	1-783-240-11	CABLE, FLEXIBLE FLAT (FFC-236)	
51	1-475-621-11	SWITCH BLOCK, CONTROL(MR-8500)	
166	1-475-619-11	SWITCH BLOCK, CONTROL (SS-8500)	
171	1-475-618-81	SWITCH BLOCK, CONTROL (FK-8500)	
184	1-469-363-11	FILTER, EMI (MD)	
188	1-469-364-11	FILTER, EMI (CS)	
204	1-790-412-11	CABLE, FLEXIBLE FLAT (FFC-256)(TR913E)	
241	1-672-662-11	FP-47 FLEXIBLE BOARD (TR950E)	
253	8-848-729-01	DEVICE, LENS LSV-630A	
255	1-758-084-21	FILTER BLOCK, OPTICAL	
D001	8-719-988-42	DIODE GL453	
IC1401	A-7030-981-A	CCD BLOCK ASSY (CCD IMAGER)	
J001	1-565-276-31	JACK, ULTRA SMALL 1P	
LCD902	8-753-023-89	LCX024AK-J (TR950E)	
⚠ LED901	1-517-858-11	LIGHT, BACK	
M901	A-7048-899-A	DRUM BLOCK ASSY (DGH-0F1A-R)(PAL)	
M902	8-835-635-01	MOTOR, DC SCE12A/C-NP (CAPSTAN)	
M903	X-3945-401-1	MOTOR ASSY, DC (LOADING)	
M905	1-763-262-11	MOTOR, FOCUS STEPPING	
M906	1-763-046-21	MOTOR, ZOOM STEPPING	
MIC901	1-542-312-11	MICROPHONE (L)	
MIC902	1-542-312-11	MICROPHONE (R)	
S001	1-682-614-11	SWITCH, PUSH (3KEY)	(Hi8 MP,ME/MP,REC PROOF)
S002	1-572-688-11	SWITCH, PUSH (1 KEY) (C.C.LOCK)	
S901	1-762-436-15	SWITCH, ROTARY (ENCODER)	
⚠ V901	1-452-673-61	CRT ASSY (M01KXX90WB) (TR913E)	
		ACCESSORIES	
		**********	
	1-467-574-21	REMOTE COMMANDER (RMT-708)	
	3-958-131-01	LID, BATTERY CASE (for RMT-708)	
	1-475-599-11	ADAPTOR, AC	
	1-575-334-11	AV CONNECTING CABLE (1.5m)	
⚠	1-690-827-11	CORD SET, POWER (EXCEPT TR913E:UK)	
	1-770-783-11	CONNECTOR, CONVERSION	
⚠	1-775-843-52	CORD, POWER (WITH FILTER) (TR913E:UK)	
	3-865-657-11	MANUAL, INSTRUCTION (ENGLISH/RUSSIAN)	(TR913E:EE,NE,RUS,UK/TR950E)
	3-865-657-21	MANUAL, INSTRUCTION	(SPANISH/PORTUGUESE)(TR913E:AEP1/TR950E:AEP)
	3-865-657-31	MANUAL, INSTRUCTION (GERMAN/ITALIAN)	(TR913E:AEP/TR950E:AEP)
	3-865-657-41	MANUAL, INSTRUCTION (FRENCH/DUTCH)	(TR913E:AEP2/TR950E:AEP)
	3-865-657-51	MANUAL, INSTRUCTION (POLISH/SWEDISH)	(TR913E:EE,NE,RUS/TR950E:EE,NE,RUS)
	3-987-015-01	BELT (S), SHOULDER	
	A-7094-141-A	NP-330 BATTERY PACK	

Be sure to read “Precautions upon replacing CCD imager” on page 4-9 when changing the CCD imager.

Note : The components identified by mark ⚠ or dotted line with mark ⚠ are critical for safety.
Replace only with part number specified.

⟨FOR CAMERA COLOR REPRODUCTION ADJUSTMENT⟩

Take a copy of CAMERA COLOR REPRODUCTION FRAME and Parts referencesheets with a clear sheet for use.

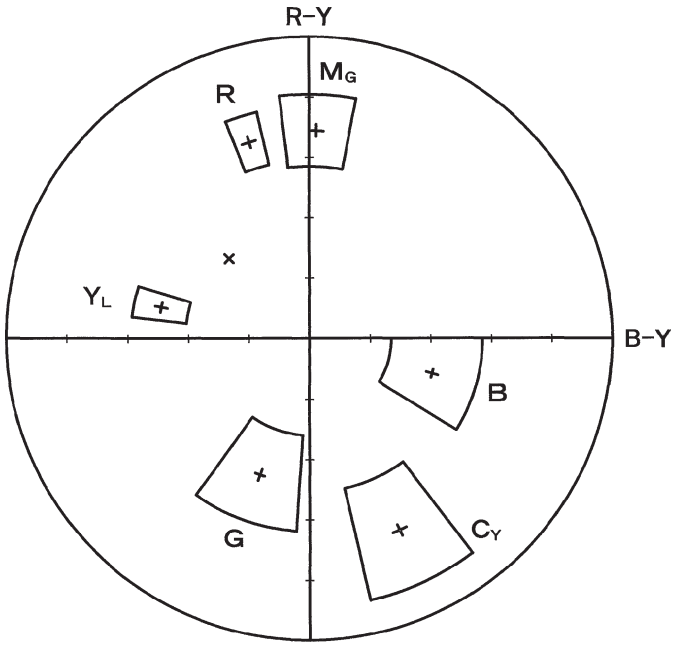

CCD-TR913E/TR950E

⟨PARTS REFERENCE SHEET⟩

You can find the parts position of location of mount locations applying to VC-214 board of a set.

VC-214 CCD-TR913E/TR950E SIDE A

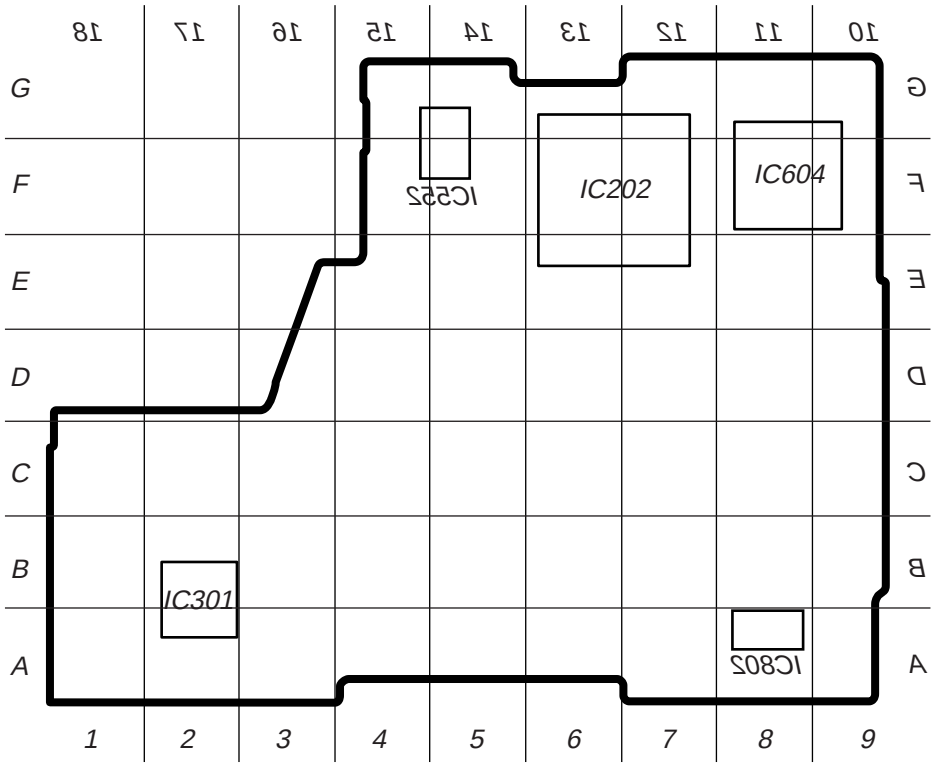

VC-214 CCD-TR913E/TR950E SIDE B

9-974-138-11

Sony Corporation
Personal A&V Products Company

99B1655-1
Printed in Japan ©1999.2
Published by Quality Engineering Dept.
(Shinagawa)